ELECTRONIC STETHOSCOPE AND HEART RATE MONITOR NICOSIA-2015

ELECTRONIC STETHOSCOPE AND HEART RATE MONITOR

A GRADUATION PROJECT SUBMITTED TO BIOMEDICAL ENGINEERING DEPARTMENT OF NEAR EAST UNIVERSITY

BY

MOHAMAD AL GHAWAS

RAND AL MUALLEM

IN PARTIAL FULFILLMENT OF THE REQUIREMENTS FOR THE DEGREE OF BACHELOR OF SCIENCE IN BIOMEDICAL ENGINEERING

NICOSIA 2015

ELECTRONIC STETHOSCOPE
AND HEART RATE MONITOR

A GRADUATION PROJECT SUBMITTED TO
BIOMEDICAL ENGINEERING DEPARTMENT
OF
NEAR EAST UNIVERSITY

BY

MOHAMAD AL GHAWAS
RAND AL MUALLEM

IN PARTIAL FULFILLMENT OF THE REQUIREMENTS
FOR THE DEGREE OF BACHELOR OF SCIENCE IN
BIOMEDICAL ENGINEERING

NICOSIA 2015

We hereby declare that all information in this document has been obtained and presented in accordance with academic rules and ethical conduct. We also declare that, as required by these rules and conduct, We have fully cited and referenced all material and results that are not original to this work.

Name, Last name:

MOHAMAD AL GHAWAS – RAND AL MUALLEM

Acknowledgements

Firstly, We express our gratitude to our supervisor Mr. Ali Işın, without whose inspiration this would project wouldn't have materialized.

We are very much indebted to the Head of the Dept, Assoc. Prof. Dr. Terin ADALI for her support and encouragement.

We are also grateful to the faculty and staff members of Biomedical Engineering Department for their relentless support.

Not to forget our friends and family members, without we wouldn't have reached anywhere.

Contents

Figures

Digital Stethoscope

A portable, electronic auscultation device

"A digital stethoscope that can amplify, play, and record heart signals."

ABSTRACT

The purpose of this project was to design and implement a digital stethoscope toserve as a platform for potential computer aided diagnosis (CAD) applications forthe detection of cardiac murmurs. The system uses a custom-built sensor (microphone) to captureheart sounds and converts them into electrical signals to be processed by anArduino Uno (ATmega328 microcontroller). The captured signals are outputted via pulse-width modulation (BWM) to an audio socket (speaker) for real-time auscultation.

For the user interface, the system includes a 4-line 20-character wide LCD display and a 16-button keypad. The microcontroller also uses the transmitted data to calculate and display the patient's average heart rate in beats per minute (BPM) on LCD.

This project is meant to provide a framework for developing useful embedded CAD tools for cardiac murmur detection. Heart murmurs may go unnoticed during routine check-ups since detection relies on the training of physicians, the quality of the equipment used, and the severity of the condition. A digital stethoscope can be used to assist physicians in analyzing cardiac signals in real time during auscultation to reduce the risks of not detecting certain conditions.

Keywords: Stethoscope, Heart Sounds, Heart Rate, Arduino, LCD.

1.CHAPTER 1 - INTRODUCTION

1.1 Introduction:

Our project is a digital stethoscope and it also calculates beats per minute.

We are as a biomedical engineering students searched about what is can be useful and comfortable for the doctors in cardiac clinics, so we found that the electronic stethoscope provide better diagnosis than the classical one, and supporting the stethoscope by heart rate calculator that give the doctor more flexible working.

The design of our project centers around an acquisition circuit, data processing in Arduino, and the output on a LCD. The first part of the stethoscope is the acquisition unit, which consists of an actual stethoscope mated with a microphone, and an amplifier circuit. The microphone captures the audible signal from the body that is acoustically amplified by the stethoscope. The analog data will be independently sampled by the Arduino and capture the appropriate characteristics of the signal for beat detection . Programming Environment, uses a moving threshold scheme to detect the actual heartbeats, and from that derive the heart rate. Then the signal is shown on LCD such as beats per minute.

The overall architecture of the system is centered on the Arduino Uno (ATmega328 microcontroller). The acoustic sensor and keypad are inputs to the Arduino, while the LCD and speaker are outputs.

1.1.1Block diagram:

The Arduino runs several software interfaces to support the various features of the digital stethoscope. The signal capturing interface uses the analog-to-digital converter to sample the

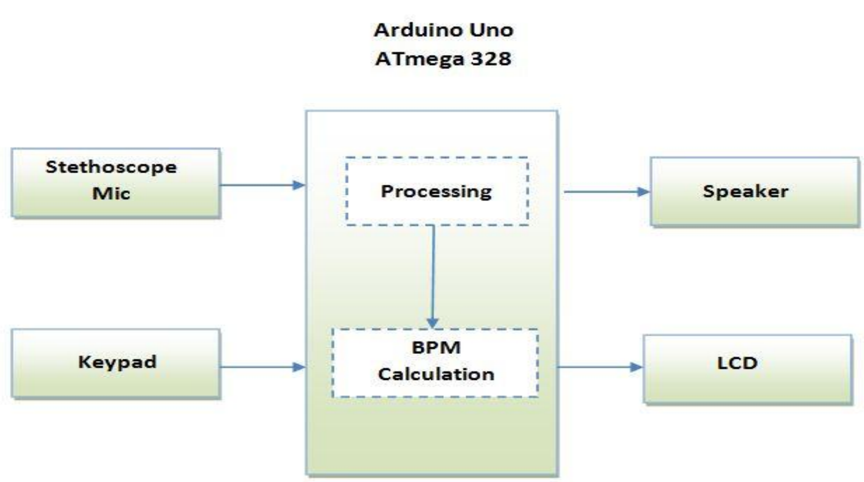

Fig.1 Block Diagram

acoustic sensor . The real-time audio processing module modifies the measured signal based on user settings and outputs it to the 3.5 mm audio socket via pulse-width modulation. The user interface supports the detection of keypad button presses as well as controls the LCD display to reflect the current state of the system. In addition, the user interface also outputs real-time or recorded data to a DELPHI running on a separate PC for signal visualization and average heart rate calculations. The Flash interface includes a software library for SPI communication to read from and write data to the external Flash memory chip.

In order to reaches highest level of understanding of our project, our thesis will be divided into six chapters:

- The First Chapter: Is a general overview for the project, working idea and importance of our project.
- The Second Chapter: Anatomical and physiological description of human heart, heart valves and heart sounds as what is being captured.
- The Third Chapter: Definition of stethoscope, its working principle, its history. Then the components that used and its importance for this project.
- The Fourth Chapter: The practical side of the project: main parts, circuits schemes, programming algorithms and working steps.
- The Fifth Chapter: The results: Discussion about it, its accuracy and compatibility with normal parameters.
- The Sixth Chapter: A brief idea about the project, future outlook, what we can do for the development of this project and make it better.
- The Seventh Chapter: Appendix: Datasheets, full circuits schemes and programming code.

2.CHAPTER2 - ANATOMICAL & PHYSIOLOGICAL DESCRIPTION OF HEART

2.1 Anatomy of Heart:

Heart is muscular organ, which pumps blood through the vessels , located in chest cavity ,consists of 3 layers :

Epicard (outer) ,Myocard (mid, muscular) and Endocard (inner).

The heart composed of 4 chambers : 2 atrium (left & right) and 2 ventricles (left & right).

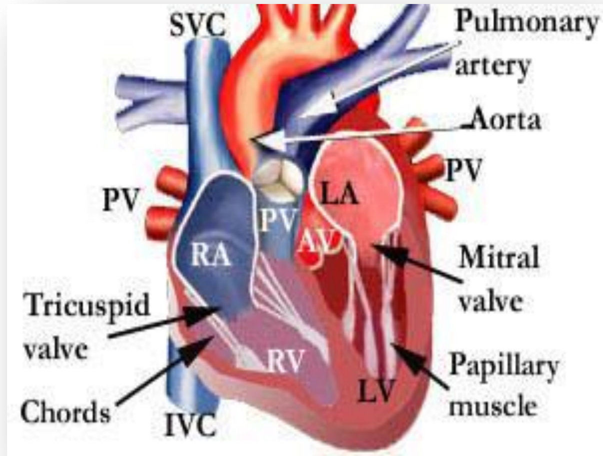

Fig.2 Heart Anatomy

2.1.1Heart valves:

The heart contains 4 heart valves (2 on the right side and 2 on the left side) that open and close to direct proper blood flow through the heart and to the rest of the body.

Four types of heart valves are:

- Tricuspid valve: allows flow from the right atrium to the right ventricle.
- Pulmonary valve: from the right ventricle to the pulmonary artery
- Mitral Valve: from the left atrium to the left ventricle.
- Aortic Valve: from the left ventricle to the aorta.

2.2Heart Sounds:

The heart sounds are the noises (sound) generated by the beating heart and the resultant flow of blood through it. This is also called a heartbeat. In cardiac auscultation, an examiner uses a stethoscope to listen for these sounds, which provide important information about the condition of the heart.

These are the first heart sound (S1) and second heart sound (S2), produced by the closing of the AV valves and semi-lunar valves respectively. In addition to these normal sounds, a variety of other sounds may be present including heart murmurs, adventitious sounds, and gallop rhythms S3 and S4.(Bickley & Szilagyi, 2005)

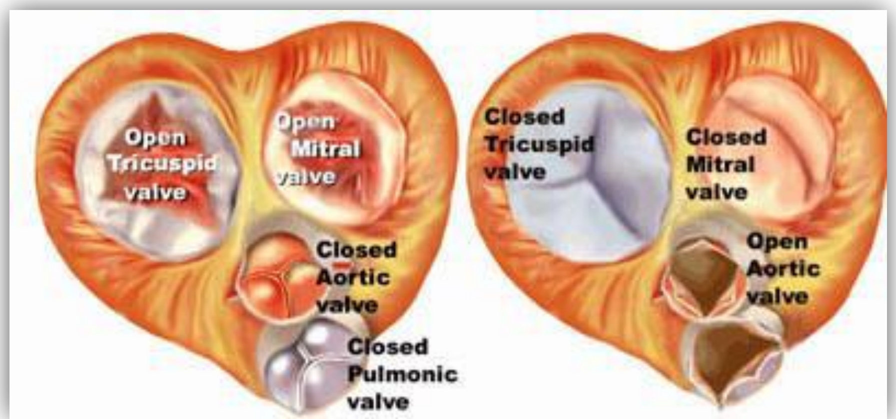

Fig.3 Heart Valves (Bickley & Szilagyi, 2005)

Heart murmurs are generated by turbulent flow of blood, which may occur inside or outside the heart. Murmurs may be physiological (benign) or pathological (abnormal). Abnormal murmurs can be caused by stenosis restricting the opening of a heart valve, resulting in turbulence as blood flows through it. Abnormal murmurs may also occur with valvular insufficiency (or regurgitation), which allows backflow of blood when the incompetent valve closes with only partial effectiveness. Different murmurs are audible in different parts of the cardiac cycle, depending on the cause of the murmur

2.2.1 First heart sound (S1):

The first heart tone, or S1 is composed of components M1 and T1. Normally M1 precedes T1 slightly. It is caused by the sudden block of reverse blood flow due to closure of the atrioventricular valves, i.e. mitral and tricuspid, at the beginning of ventricular contraction, or systole. When the ventricles begin to contract, so do the papillary muscles in each ventricle. The papillary muscles are attached to the tricuspid and mitral valves via chordae tendineae, which bring the cusps of the valve closed(chordae tendineae also prevent the valves from blowing into the atria as ventricular pressure rises due to contraction). The closing of the inlet valves prevents regurgitation of blood from the ventricles back into the atria. The S1 sound results from reverberation within the blood associated with the sudden block of flow reversal by the valves. If T1 occurs more than slightly after M1, then the patient likely has a dysfunction of conduction of the right side of the heart such as a Right bundle branch block.

S1 has components in 10-140Hz bands.

2.2.2 Second heart sound (S2):

The second heart tone, or S2 is composed of components A2 and P2. Normally A2 precedes P2 especially during inspiration when a split of S2 can be heard. It is caused by the sudden block of reversing blood flow due to closure of the aortic valve and pulmonary valve at the end of ventricular systole, i.e. beginning of ventricular diastole. As the left ventricle empties, its pressure falls below the pressure in the aorta, aortic blood flow quickly reverses back toward the left ventricle, catching the aortic valve leaflets and is stopped by aortic (outlet) valve closure. Similarly, as the pressure in the right ventricle falls below the pressure in the pulmonary artery, the pulmonary (outlet) valve closes. The S2 sound results from reverberation within the blood associated with the sudden block of flow reversal.

S2 has components in 10-400Hz bands.

Extra heart sounds:

The rarer extra heart sounds form gallop rhythms and are heard in both normal and abnormal situations.

2.2.3 Third heart sound (S3):

Rarely, there may be a third heart sound also called a protodiastolic gallop or ventricular gallop. It occurs at the beginning of diastole after S2 and is lower in pitch than S1 or S2 as it is not of valvular origin. The third heart sound is benign in youth and some trained athletes, but if it re-emerges later in life it may signal cardiac problems like a failing left ventricle as in dilated congestive heart failure (CHF). S3 is thought to be caused by the oscillation of blood back and forth between the walls of the ventricles initiated by inrushing blood from the atria. The reason the third heart sound does not occur until the middle third of diastole is probably because during the early part of diastole, the ventricles are not filled sufficiently to create enough tension for reverberation.. In other words, an S3 heart sound indicates increased volume of blood within the ventricle. An S3 heart sound is best heard with the bell-side of the stethoscope (used for lower frequency sounds).

2.2.4 Fourth heart sound (S4):

The rare fourth heart sound is sometimes audible in healthy children and again in trained athletes, but when audible in an adult is called a presystolic gallop or atrial gallop. This gallop is produced by the sound of blood being forced into a stiff/hypertrophic ventricle. It is a sign of a pathologic state, usually a failing left ventricle, but can also be heard in other conditions such as restrictive cardiomyopathy. The sound occurs just after atrial contraction ("atrial kick") at the end of diastole and immediately before S1, producing a rhythm sometimes referred to as the "Tennessee" gallop where S4 represents the "tenn-" syllable. It is best heard at the cardiac apex with the patient in the left lateral decubitus position and holding his breath. The combined presence of S3 and S4 is a quadruple gallop. At rapid heart rates, S3 and S4 may merge to produce a summation gallop.

2.2.5 Murmurs:

Heart murmurs are produced as a result of turbulent flow of blood, turbulence sufficient to produce audible noise. They are usually heard as a whooshing sound. The term murmur only refers to a sound believed to originate within blood flow through or near the heart; rapid blood velocity is necessary to produce a murmur. Yet most heart problems do not produce any murmur and most valve problems also do not produce an audible murmur.

The following paragraphs overview the murmurs most commonly heard in adults who do not have major congenital heart abnormalities.(Bickley & Szilagyi, 2005)

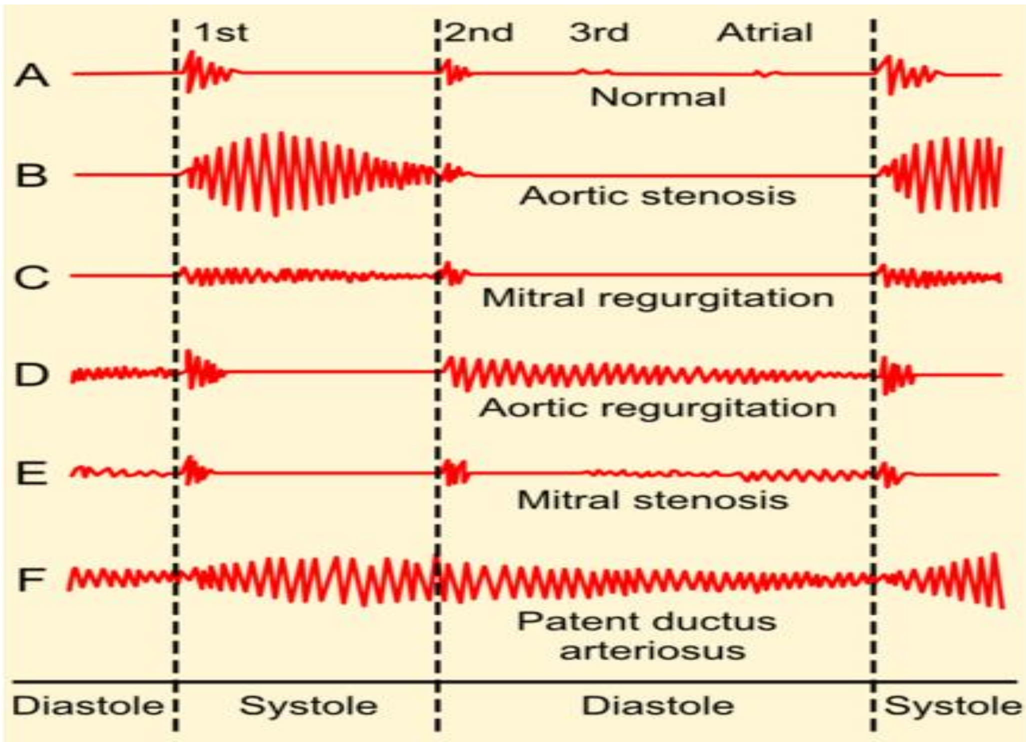

Fig.4 Heart Sounds and Murmurs(http://en.wikipedia.org/wiki/Heart_sounds, 2014)

- Regurgitation through the mitral valve is by far the most commonly heard murmur, sometimes fairly loud to a practiced ear, even though the volume of regurgitant blood flow may be quite small. Yet, though obvious using echocardiography visualization, probably about 20% of cases of mitral regurgitation does not produce an audible murmur.
- Stenosis of the aortic valve is typically the next most common heart murmur, a systolic ejection murmur. This is more common in older adults or in those individuals having a two, not a three leaflet aortic valve.
- Regurgitation through the aortic valve, if marked, is sometimes audible to a practiced ear with a high quality, especially electronically amplified, stethoscope. Generally, this is a very rarely heard murmur, even though aortic valve regurgitation is not so rare. Aortic regurgitation, though obvious using echocardiography visualization, usually does not produce an audible murmur.

- Stenosis of the mitral valve, if severe, also rarely produces an audible, low frequency soft rumbling murmur, best recognized by a practiced ear using a high quality, especially electronically amplified, stethoscope.
- Either regurgitation through, or stenosis of, the tricuspid or pulmonary valves essentially never produces audible murmurs.
- Other audible murmurs are associated with abnormal openings between the left ventricle and right heart or from the aortic or pulmonary arteries back into a lower pressure heart chamber.

Gradations of Murmurs	(Defined based on use of an acoustic, not a high-fidelity amplified electronic stethoscope
Grade	**Description**
Grade 1	Very faint, heard only after listener has "tuned in"; may be heard in all positions
Grade 2	Quiet, but heard immediately after placing the stethoscope on the chest.
Grade 3	Moderately loud.
Grade 4	Loud, with palpable thrill (i.e., a tremor or vibration felt on palpation)
Grade 5	Very loud, with thrill. May be heard when stethoscope is partly off the chest.
Grade 6	Very loud, with thrill. May be heard with stethoscope entirely off the chest.

Fig.5 Murmurs Description(Bickley & Szilagyi, 2005)

3.CHAPTER 3 - THE STETHOSCOPE & USED COMPONENTS.

3.1 The Stethoscope .. Historical Overview:

Assessing the sounds of the human body was reported in the ancient medical literature. Amongst the earliest known medical manuscripts are the medical papyruses of ancient Egypt dating to the seventeenth century B.C., which referred to audible signs of disease within the body. Hippocrates, the Father of Medicine, advocated for the search of philosophical and practical instruments to improve medicine in 350 B.C. He discussed a procedure for shaking a patient by the shoulders and listening for sounds evoked by the chest. Hippocrates also used the method of applying the ear directly to the chest and found it useful in order to detect the accumulation of fluid within the chest. The French physician Jean-Nicolas Corvisart, who is considered the founder of French clinical medicine, was accustomed to placing his ear over the cardiac region of the chest to listen to the heart. Bayle and Double, who like Laennec were students of Corvisart, used the unaided ear to listen to the heart of their patients.

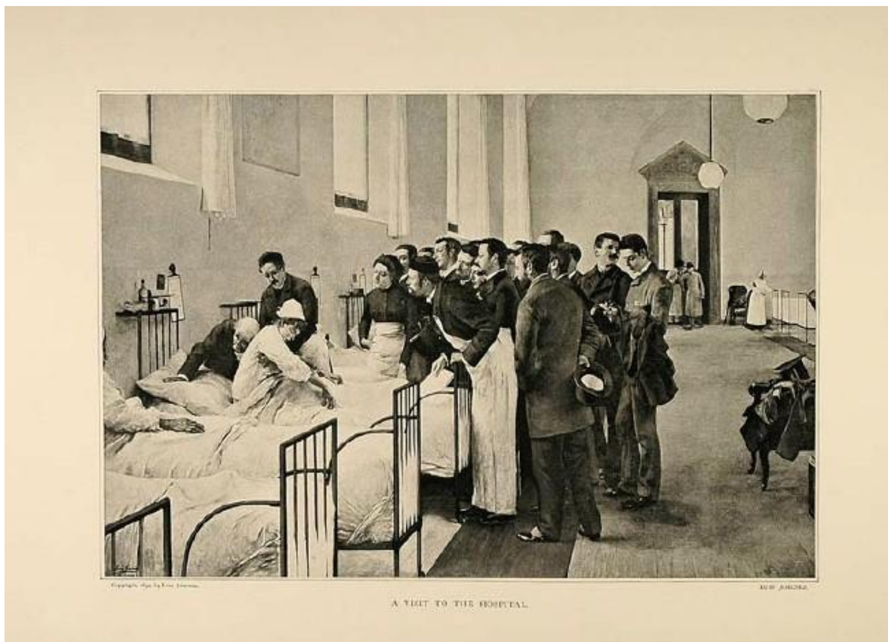

Fig.6 History of Stethoscope

Nevertheless, the evolution from listening with the unaided ear (immediate auscultation) to the aided ear (mediate auscultation) awaited Laennec's invention of the stethoscope in 1816.

The stethoscope was invented in 1816 when a young French physician named Rene TheophileHyacinthe Laennec was examining a young female patient. Laennec was embarrassed to place his ear to her chest (Immediate Auscultation), which was the method of auscultation used by physicians at that time. He remembered a trick he learned as a child that sound travels through solids and thus he rolled up 24 sheets of paper, placed one end to his ear and the other end to the woman's chest. He was delighted to discover that the sounds were not only conveyed through the paper cone, but they were also loud and clear. The first recorded manuscript documenting auscultation using the stethoscope(Mediate Auscultation) was in March 8, 1817, when Laennec noted examining a Marie-Melanie Basset, who was 40 years old.

In the following figure, An engraving of a physician examining a patient by "immediate" ausculatation, in which the doctor placed his ear on the chest of the patient to hear the sounds made by the lungs during breathing. The print shows a group of physicians, medical students and nurses observing the physician performing his exam.

Laennec preferred to have his instrument simply called "Le Cylindre," as he thought naming such a fundamental instrument was unnecessary. He became remorse at the names it was being

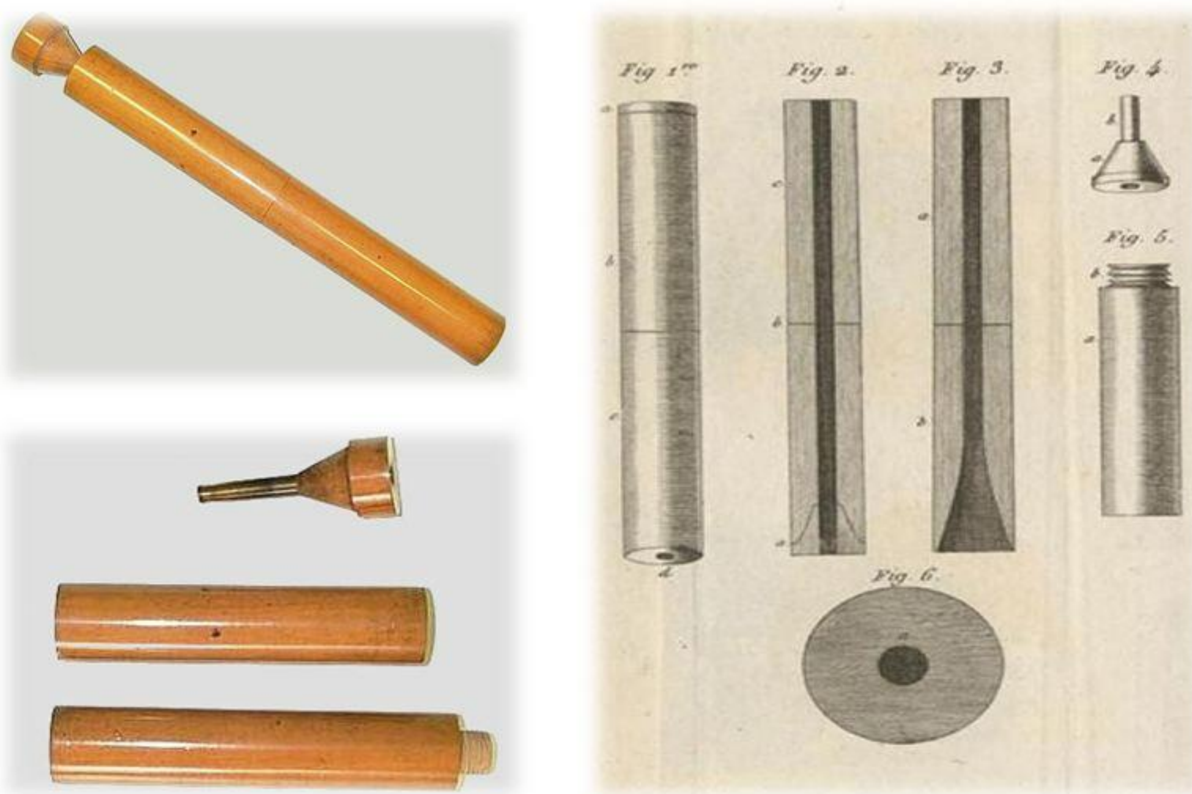

Fig.7 Evolution of Stethoscope

given by his colleagues and decided that if it should be called anything, it should be "Stethoscope," which is derived from the Greek words for 'I see' and 'the chest.' He created a stethoscope from a turned piece of wood with hollow bore in the center. It was made of two pieces. One end had a hole to place against the ear and the other end was hollowed out into a funnel shaped cone. There was a plug that fit into this cone which had a hollow brass tube placed inside it. This plug was put in the funnel shaped end of the stethoscope to listen to the heart, and removed to examine the lungs. Laennec published his classic treatise on mediate auscultation in 1819 in which he discussed mediate auscultation and illustrated the design of the stethoscope. The stethoscope was described as being 12 inches long and 1.5 inches in diameter with a 3/8 inch central bore hole throughout its length.(Bickley & Szilagyi, 2005)

3.2 What is Stethoscope ?!

The stethoscope is an acoustic medical device for auscultation, or listening to the internal sounds of a human body. It is often used to listen to lung and heart sounds. It is also used to listen to intestines and blood flow in arteries and veins. In combination with sphygmomanometer, it is commonly used for measurements of blood pressure.

3.2.1 The components of Stethoscope:

3.2.1.1 Headset :

The headset is the metal part of the stethoscope onto which the tubing is fitted. The headset is made up of the two ear tubes, tension springs, and the ear tips. The wearer can adjust the tension to a comfortable level by pulling the ear tubes apart to loosen the headset or crossing them over to tighten

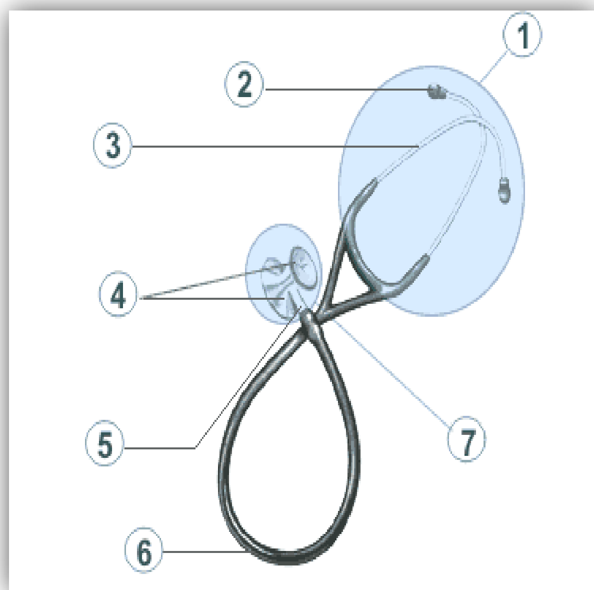

Fig.8 Stethoscope Parts

3.2.1.2Ear tip :

Soft-sealing ear tips offer increased comfort, seal and durability, and feature a surface treatment that increases surface lubricity and reduces lint and dust adhesion.

3.2.1.3Ear tube :

The ear tube is the part to which the ear tips are attached.

3.2.1.4 Tunable Diaphragm :

A traditional stethoscope consists of a bell and a diaphragm. The bell is used with light skin contact to hear low frequency sounds and the diaphragm is used with firm skin contact to hear high frequency sounds.

3.2.1.5 Stem:

The stem connects the stethoscope tubing to the chest piece.

3.2.1.6 Tubing:

The tubing consists of two openings. The tubing on all Littmann stethoscopes is manufactured from polyvinyl chloride (PVC). The tubing does not contain either natural rubber latex or dry natural rubber.

3.2.1.7 Chest piece :

The chest piece is the part of the stethoscope that is placed on the location where the user wants to hear sound.(Bickley & Szilagyi, 2005)

3.3 Electronic Components:

3.3.1 Resistors:

A resistor is a two-terminal electronic component that produces a voltage across its terminals that is proportional to the electric current passing through it in accordance with Ohm's law:

$$V = IR$$

Resistors are elements of electrical networks and electronic circuits and are ubiquitous in most electronic equipment. Practical resistors can be made of various compounds and films, as well as resistance wire (wire made of a high-resistivity alloy, such as nickel/chrome).

Fig.9 Resistors

The primary characteristics of a resistor are the resistance, the tolerance, maximum working voltage and the power rating. Other characteristics include temperature coefficient, noise, and inductance. Less well-known is critical resistance, the value below which power dissipation limits the maximum permitted current flow, and above which the limit is applied voltage. Critical resistance is determined by the design, materials and dimensions of the resistor.

Resistors can be integrated into hybrid and printed circuits, as well as integrated circuits. Size, and position of leads (or terminals) are relevant to equipment designers; resistors must be physically large enough not to overheat when dissipating their power.

Theory of operation:

The behavior of an ideal resistor is dictated by the relationship specified in Ohm's law:

$$\mathbf{V = IR}$$

Ohm's law states that the voltage (V) across a resistor is proportional to the current (I) through it where the constant of proportionality is the resistance (R).

Equivalently, Ohm's law can be stated:

$$V/I=R$$

This formulation of Ohm's law states that, when a voltage (V) is maintained across a resistance (R), a current (I) will flow through the resistance.

3.3.1.1 Color code of Resistors:

The axial lead carbon resistors measured by the color codes marked on them. Information such as resistance value, tolerance, temperature co-efficient measured by the color codes, and the amount of power (wattage) identified by the size.

The color bands of the carbon resistors can be four, five or, six bands, for all the first two bands represent first two digits to measure their value in ohms. The third band of a four-banded resistor represents multiplier and the fourth band as tolerance. Whereas, the five and six color-banded resistors, the third band rather represents as third digit but the fourth and fifth bands represent as multiplier and tolerance respectively. Only the sixth band represents temperature co-efficient in a six-banded resistor.(Idrees, 2004)

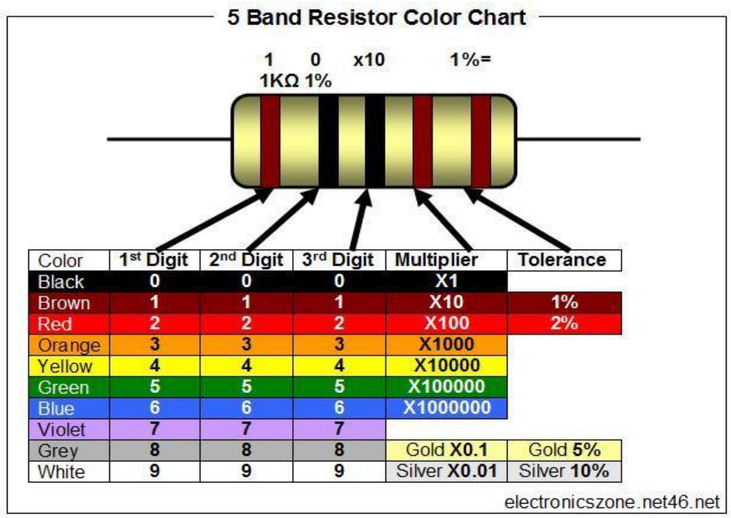

Color	1st Digit	2nd Digit	3rd Digit	Multiplier	Tolerance
Black	0	0	0	X1	
Brown	1	1	1	X10	1%
Red	2	2	2	X100	2%
Orange	3	3	3	X1000	
Yellow	4	4	4	X10000	
Green	5	5	5	X100000	
Blue	6	6	6	X1000000	
Violet	7	7	7		
Grey	8	8	8	Gold **X0.1**	Gold **5%**
White	9	9	9	Silver **X0.01**	Silver **10%**

Fig.10 Resistor Color Code

3.3.2 Capacitors:

A capacitor or condenser is a passive electronic component consisting of a pair of conductors separated by a dielectric (insulator). When a potential difference (voltage) exists across the conductors, an electric field is present in the dielectric. This field stores energy and produces a mechanical force between the conductors. The effect is greatest when there is a narrow separation between large areas of conductor, hence capacitor conductors are often called plates.

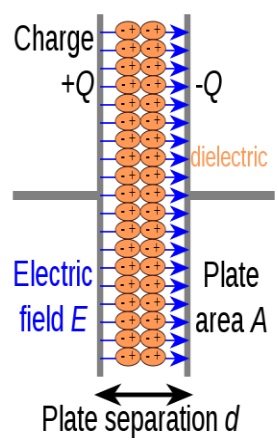

Fig.11 Capacitor Construction

An ideal capacitor is characterized by a single constant value, capacitance, which is measured in farads. This is the ratio of the electric charge on each conductor to the potential difference between them. In practice, the dielectric between the plates passes a small amount of leakage current. The conductors and leads introduce an equivalent series resistance and the dielectric has an electric field strength limit resulting in a breakdown voltage.

Capacitors are widely used in electronic circuits to block the flow of direct current while allowing alternating current to pass, to filter out interference, to smooth the output of power supplies, and for many other purposes. They are used in resonant circuits in radio frequency equipment to select particular frequencies from a signal with many frequencies.

Theory of operation:

A capacitor consists of two conductors separated by a non-conductive region.The non-conductive substance is called the dielectric medium, although this may also mean a vacuum or a semiconductor depletion region chemically identical to the conductors. A capacitor is assumed to be self-contained and isolated, with no net electric charge and no influence from an external electric field. The conductors thus contain equal and opposite charges on their facing surfaces and the dielectric contains an electric field. The capacitor is a reasonably general model for electric fields within electric circuits.

An ideal capacitor is wholly characterized by a constant capacitance C, defined as the ratio of charge ±Q on each conductor to the voltage V between them:

$$C=Q/V$$

3.3.2.1Types of Capacitors:

3.3.2.1.1 Ceramic capacitor:

In electronics, a ceramic capacitor is a capacitor constructed of alternating layers of metal and ceramic, with the ceramic material acting as the dielectric. The temperature coefficient depends on whether the dielectric is Class 1 or Class 2. A ceramic capacitor (especially the class 2) often has high dissipation factor, high frequency coefficient of dissipation.

Construction:

A ceramic capacitor is a two-terminal, non-polar device. The classical ceramic capacitor is the "disc capacitor". Ceramic disc capacitors are in widespread use in electronic equipment, providing high capacity and small size at low price compared to other low value capacitor types.

Ceramic capacitors come in various shapes and styles, including:

- disc, resin coated, with through-hole leads.

Fig.12 Ceramic Capacitor

- multilayer rectangular block, surface mount.
- bare leadless disc, sits in a slot in the PCB and is soldered in place, used for UHF applications.
- tube shape, not popular now.

3.3.2.1.2 Electrolytic capacitor:

An electrolytic capacitor is a type of capacitor that uses an ionic conducting liquid as one of its plates with a larger capacitance per unit volume than other types. They are often referred to in electronics usage simply as "electrolytics". They are valuable in relatively high-current and low-frequency electrical circuits. This is especially the case in power-supply filters, where they store charge needed to moderate output voltage and current fluctuations in rectifier output. They are also widely used as coupling capacitors in circuits where AC should be conducted but DC should not.

Fig.13 Electrolyte Capacitor

Electrolytic capacitors can have a very high capacitance, allowing filters made with them to have very low corner frequencies.

3.3.3 Microphone:

A microphone is an acoustic-to-electric transducer or sensor that converts sound into an electrical signal. In 1876, Emile Berliner invented the first microphone used as a telephone voice transmitter. Microphones are used in many applications such as telephones, tape recorders, karaoke systems, hearing aids, motion picture production, live and recorded audio engineering, FRS radios, megaphones, in radio and television broadcasting and in computers for recording voice, speech

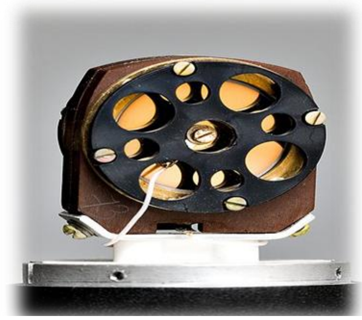

Fig.14 Microphone

recognition, VoIP, and for non-acoustic purposes such as ultrasonic checking or knock sensors.

Most microphones today use electromagnetic induction (dynamic microphone), capacitance change (condenser microphone, pictured right), piezoelectric generation, or light modulation to produce an electrical voltage signal from mechanical vibration.

3.3.3.1 Omnidirectional:

An omnidirectional (or nondirectional) microphone's response is generally considered to be a perfect sphere in three dimensions. In the real world, this is not the case. As with directional microphones, the polar pattern for an "omnidirectional" microphone is a function of frequency. The body of the microphone is not infinitely small and, as a consequence, it tends to get in its own way with respect to sounds arriving from the rear, causing a slight flattening of the polar response. This flattening increases as the diameter of the microphone (assuming it's cylindrical) reaches the wavelength of the frequency in question. Therefore, the smallest diameter microphone gives the best omnidirectional characteristics at high frequencies.

The wavelength of sound at 10 kHz is little over an inch (3.4 cm) so the smallest measuring microphones are often 1/4" (6 mm) in diameter, which practically eliminates directionality even up to the highest frequencies. Omnidirectional microphones, unlike cardioids, do not employ resonant cavities as delays, and so can be considered the "purest" microphones in terms of low coloration; they add very little to the original sound. Being pressure-sensitive they can also have a very flat low-frequency response down to 20 Hz or below. Pressure-sensitive microphones also respond much less to wind noise than directional (velocity sensitive) microphones.

An example of a nondirectional microphone is the round black eight ball.

3.3.3.2 Unidirectional:

A unidirectional microphone is sensitive to sounds from only one direction.The sound intensity for a particular frequency is plotted for angles radially from 0 to 360°.

Condenser/Capacitor or Electrostatic Microphone:

We will use a condenser type of microphone in our project.

In a condenser microphone also called a capacitor or electrostatic microphone, the diaphragm acts as one plate of a capacitor, and the vibrations produce changes in the distance between the plates.

The voltage maintained across the capacitor plates changes with the vibrations in the air, according to the capacitance equation:

$$C=Q/V$$

where Q = charge in coulombs, C = capacitance in farads and V = potential difference in volts. The capacitance of the plates is inversely proportional to the distance between them for a parallel-plate capacitor.(Idrees, 2004)

3.3.4 Loudspeaker:

A loudspeaker (or "speaker", or in the early days of radio "loud-speaker") is an electroacoustic transducer that produces sound in response to an electrical audio signal input. In other words, speakers convert electrical signals into audible signals. Non-electrical loudspeakers were developed as accessories to telephone systems, but electronic amplification by vacuum tube made loudspeakers more generally useful.

The most popular speaker used today is the dynamic speaker. The dynamic speaker operates on the same basic principle as a dynamic microphone. When an alternating current (i.e., electrical audio signal input) is applied through the voice coil that surrounds a magnet (or that is surrounded by a permanent magnet), the coil is forced back and forth as described by Faraday's law of induction, which causes the paper cone attached to the coil to respond with a rapid back-and-forth motion that creates sound waves. Where high fidelity reproduction of sound is required, multiple loudspeakers may be used, each reproducing a part of the audible frequency range. Miniature loudspeakers are found in devices such as radio and TV receivers, and many forms of music players. Larger loudspeaker systems are used for music, sound reinforcement in theatres and concerts, and in public address systems.

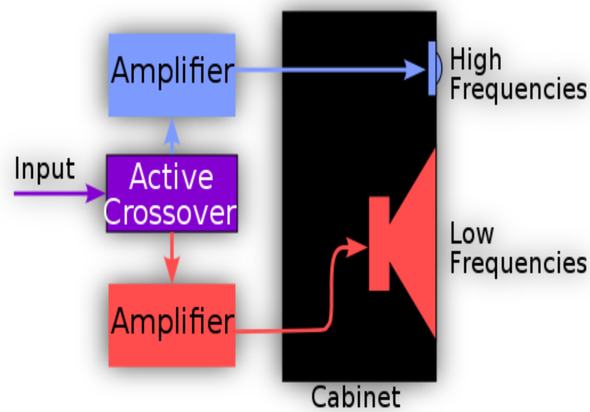

Fig.15 Speaker Construction

To make sound, a loudspeaker is driven by modulated electrical current (produced by an amplifier) that pass through a "speaker coil" which then (through inductance) magnetizes the coil, creating a magnetic field. The electrical current variations that pass through the speaker are thus converted to varying magnetic forces, which move the speaker diaphragm, which thus forces the driver to produce air motion that is similar to the original signal from the amplifier.(Idrees, 2004)

3.3.5 Microcontroller:

A microcontroller (sometimes abbreviated µC, uC or MCU) is a small computer on a single integrated circuit containing a processor core, memory, and programmable input/output peripherals. Program memory in the form of NOR flash or OTP ROM is also often included on chip, as well as a typically small amount of RAM. Microcontrollers are designed for embedded applications, in contrast to the microprocessors used in personal computers or other

Fig.16 Microcontroller

general purpose applications.

Microcontrollers are used in automatically controlled products and devices, such as automobile engine control systems, implantable medical devices, remote controls, office machines, appliances, power tools, toys and other embedded systems. By reducing the size and cost compared to a design that uses a separate microprocessor, memory, and input/output devices, microcontrollers make it economical to digitally control even more devices and processes. Mixed signal microcontrollers are common, integrating analog components needed to control non-digital electronic systems.

Some microcontrollers may use four-bit words and operate at clock rate frequencies as low as 4 kHz, for low power consumption (single-digit milliwatts or microwatts). They will generally have the ability to retain functionality while waiting for an event such as a button press or other interrupt; power consumption while sleeping (CPU clock and most peripherals off) may be just nanowatts, making many of them well suited for long lasting battery applications. Other microcontrollers may serve performance-critical roles, where they may need to act more like a digital signal processor (DSP), with higher clock speeds and power consumption.(Maini, 2nd Edition: March,1998)

3.3.6 NI Multisim:

Multisim is an industry-standard, best-in-class SPICE simulation environment. It is the cornerstone of the NI circuits teaching solution to build expertise through practical application in designing, prototyping, and testing electrical circuits.

The Multisim design approach helps you save prototype iterations and optimize printed circuit board (PCB) designs earlier in the process.

The latest version of Multisim enhances already powerful simulation technology with the ability to analyze analog, digital, and power electronics across education, research, and design. Added functionality includes all-new parameter analysis, integration with new embedded targets, and simplified design with user-definable templates. Multisim Standard Service Program (SSP) customers also have access to self-paced online training.(http://www.ni.com/multisim/, 2014)

3.3.7 Arduino Uno:

The Arduino Uno is a microcontroller board based on the ATmega328 . It has 14 digital input/output pins (of which 6 can be used as PWM outputs), 6 analog inputs, a 16 MHz ceramic resonator, a USB connection, a power jack, an ICSP header, and a reset button. It contains everything needed to support the

Fig.17 Arduino Uno Kit

microcontroller; simply connect it to a computer with a USB cable or power it with a AC-to-DC adapter or battery to get started.

The Uno differs from all preceding boards in that it does not use the FTDI USB-to-serial driver chip. Instead, it features the Atmega16U2 (Atmega8U2 up to version R2) programmed as a USB-to-serial converter.

Revision 2 of the Uno board has a resistor pulling the 8U2 HWB line to ground, making it easier to put into DFU mode.

Revision 3 of the board has the following new features:

1.0 pinout: added SDA and SCL pins that are near to the AREF pin and two other new pins placed near to the RESET pin, the IOREF that allow the shields to adapt to the voltage provided from the board. In future, shields will be compatible with both the board that uses the AVR, which operates with 5V and with the Arduino Due that operates with 3.3V. The second one is a not connected pin, that is reserved for future purposes.

Stronger RESET circuit.

Atmega 16U2 replace the 8U2.

"Uno" means one in Italian and is named to mark the upcoming release of Arduino 1.0. The Uno and version 1.0 will be the reference versions of Arduino, moving forward. The Uno is the latest in a series of USB Arduino boards, and the reference model for the Arduino platform; for a comparison with previous versions.(http://www.arduino.cc/, 2014)

Summary

Microcontroller	ATmega328
Operating Voltage	5V
Input Voltage (recommended)	7-12V
Input Voltage (limits)	6-20V
Digital I/O Pins	14 (of which 6 provide PWM output)
Analog Input Pins	6
DC Current per I/O Pin	40 Ma
DC Current for 3.3V Pin	50 mA

Flash Memory	32 KB (ATmega328) of which 0.5 KB used by bootloader
SRAM	2 KB (ATmega328)
EEPROM	1 KB (ATmega328)
Clock Speed	16 MH

3.3.8 LCD (Liquid Crystal Display):

LCD is a screen has one or more rows, each row has number of small squares display characters. Most popular LCDs is 1x16, 1x20, 1x24, 2x16, 2x20, 4x16 and 4x20.

Fig.18 LCD

LCD has its own controller, and also has special memory divided into two parts: Data display memory (DD-RAM) and code generator memory (CG-RAM).

These memories can save symbols want to display and allow controller to display it again without needing to send it once again.

All of ASCII characters (189 characters) can be displayed on LCDs.(Maini, 2nd Edition: March,1998)

3.3.9 Keypad:

Keypads are a part of HMI or Human Machine Interface and play really important role in a small embedded system where human interaction or human input is needed. Matrix keypads are well known for their simple

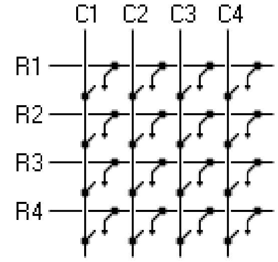

Fig.19 Keypad Construction

architecture and ease of interfacing with any microcontroller.

Constructing a Matrix Keypad

Construction of a keypad is really simple. As per the outline shown in the figure below we have four rows and four columns. In between each overlapping row and column line there is a key. So keeping this outline we can construct a keypad using simple SPST Switches as shown below:

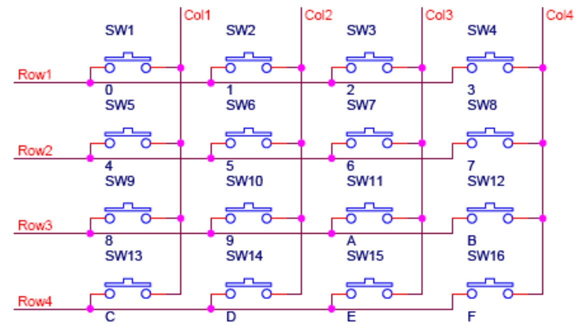

Fig.20 Keypad Switch Matrix

Now our keypad is ready, all we have to do is connect the rows and columns to a port of microcontroller and program the controller to read the input.

Scanning a Matrix Keypad:

There are many methods depending on how keypad is connected with controller, but the basic logic is same. We make the columns as i/p and we drive the rows making them o/p, this whole procedure of reading the keyboard is called scanning.

In order to detect which key is pressed from the matrix, we make row lines low one by one and read the columns. Let's say we first make Row1 low, then read the columns. If any of the key in row1 is pressed will make the corresponding column as low i.e. if second key is pressed in Row1, then column2 will give low. So we come to know that key 2 of Row1 is pressed. This is how scanning is done.

So to scan the keypad completely, we need to make rows low one by one and read the columns. If any of the button is pressed in a row, it will take the corresponding column to a low state which tells us that a key is pressed in that row. If button 1 of a row is pressed then Column 1 will become low, if button 2 then column2 and so on...(Maini, 2nd Edition: March,1998)

4.CHAPTER 4 - THE PRACTICAL IMPLEMENTATION

4.1 Project Kit:

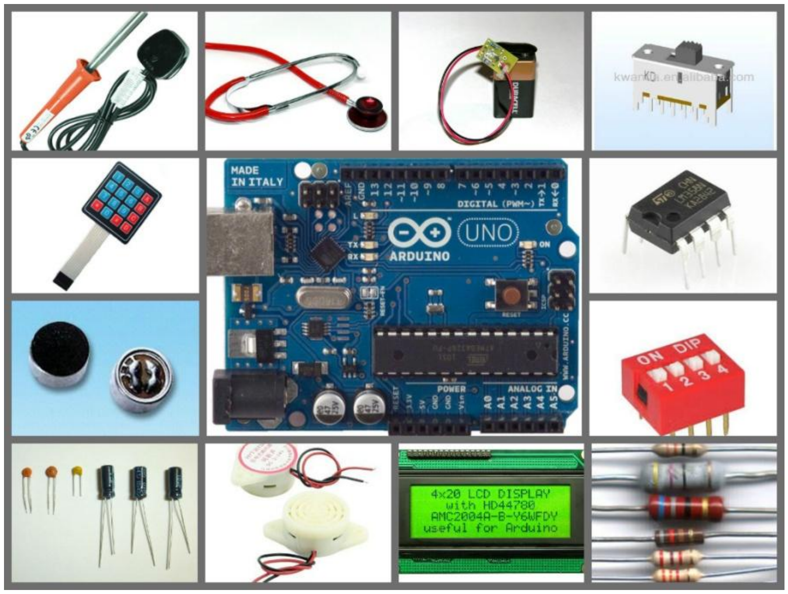

Fig.21 Project Components

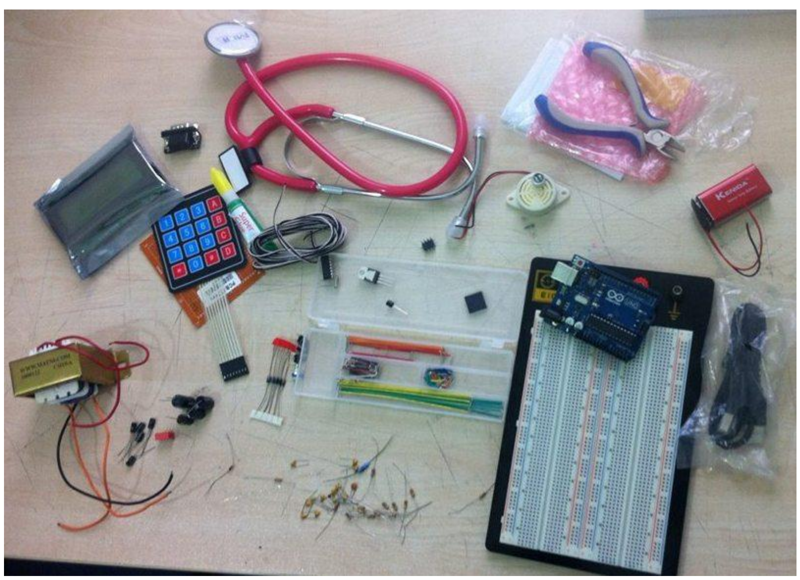

Fig.22 Project Components

The first part of our project is Electronic Stethoscope..

4.2 Electronic Stethoscope:

Electronic stethoscope circuit working consist of following parts:

4.2.1 Signal Acquisition:

first stage of any project is to how can we acquire the input (signal)?!

Fig.23 Stethoscope Preparation

So, here in this part we acquired the signal by using normal stethoscope contained MIC(it was a normal stethoscope and its tube made from rubber, we cut it then we tried to milt the rubber by heating to expand the diameter of tube to insert the MIC inside it and close it tightly by glue). The MIC working as transducer that converts signal from acoustic form to an electrical one to start processing on it ..(http://www.ece.cornell.edu/, 2014)

4.2.2 Filtering circuit:

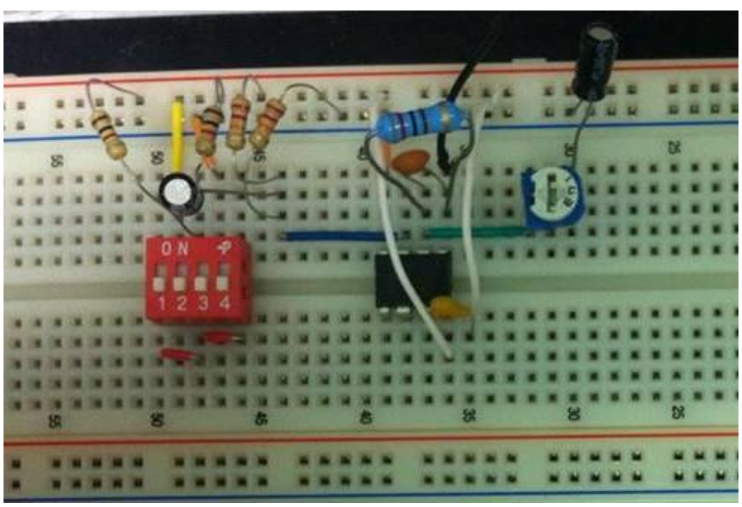

Fig.24 Applied Filtering Circuit

Principle: Isolate the desire Signal from the noise signals.

After we acquired the signal as we show in the first stage,, we have to apply some Processing procedure here we mean FILTERING PROCEDURE..

The microphone in the acoustic sensor needed to be biased in order for proper operation. In addition, the output of the microphone is on the order of millivolts, which is relatively small in magnitude This makes it challenging for the Arduino to detect changes in sensor output. In order to address both these issues, a bias and amplifier circuit was designed and implemented to

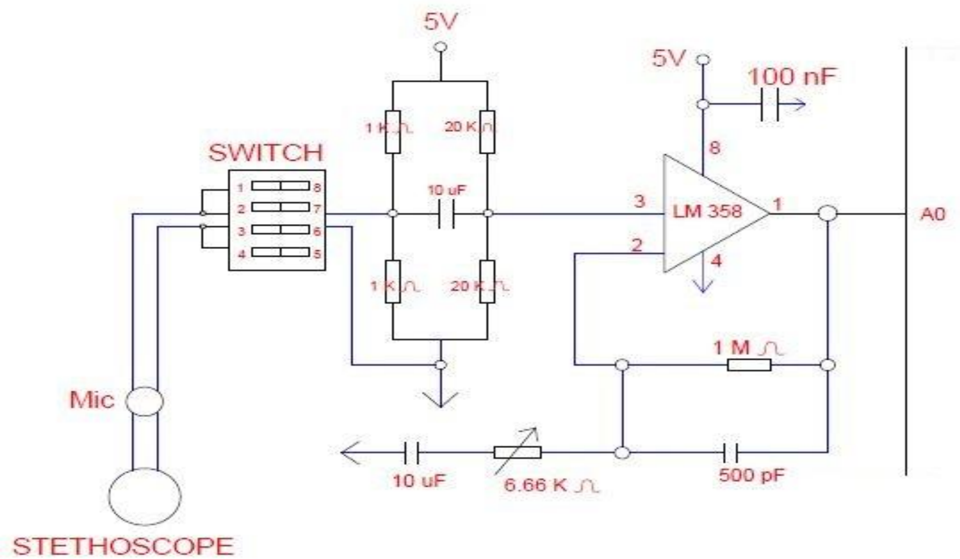

Fig.25 Scheme of Filtering Circuit

interface the raw sensor output with the Arduino. The goal of the circuit was to properly bias the microphone and amplify the sensor output to detect voltage swings caused by sounds.

The typical operating range for the microphone was 2 V, with a maximum rating of 10 V. The Arduino provided a voltage of 5 V, so a simple voltage divider circuit with identical 1k resistors was used to reduce the voltage to 2.5 V to bias the microphone. The output of the microphone was passed through a capacitor to remove the DC offset. The capacitor used was large enough to make sure that the desired low frequencies were not filtered out. With two 1k resistors in parallel with the output of the microphone, the equivalent output impedance of the sensor is roughly 400 ohms. Using a 10 uF capacitor, a simple high pass filter with a cutoff frequency around 40 Hz was designed, which is below most of the low frequencies of interest.

The DC signal was connected to the positive input (Vin+) of an operational amplifier to boost the signal amplitude. Because the Arduino measures voltages between 0 and 5 V, the Vin+ line of the op-amp was biased to 2.5 V in order to capture the largest magnitude of positive and negative swings from the microphone output. This biasing was implemented with another voltage divider circuit using identical 20k resistors. The values of these resistors were chosen to be larger than the resistors in the previous voltage divider in order to avoid affecting the equivalent output impedance of the previous stage.

For signal amplification, a non-inverting op-amp configuration was used. The gain of the circuit is defined by the following equation:

G= (R5\R6) +1

The resistors were selected to achieve an ideal gain of 150 for frequencies between the range of 20 Hz and 2 kHz. The gain was selected based on the 300 kHz gain-bandwidth product constraint of the op-amp. *Note: the resistor R6 was implemented in hardware as a variable resistor (10k trimpot) in order to allow for more convenient prototyping and testing. A capacitor was added in series with resistor R6 in the op-amp feedback loop to create a system with unity gain for DC voltage inputs. The unity gain at DC is important to prevent amplification of the 2.5 V bias at the Vin+ node. Without this additional capacitor, the output of the amplifier would saturate to 5 V when the microphone did not detect any sounds. A 10 uF capacitor was selected for C1 in order to achieve a high pass filter cutoff of approximately 2 Hz, which is close to DC in order to pass all non-DC signals. On the other hand, a 500 pF capacitor was selected for C5 in parallel with a 1M resistor in order to create a low-pass filter with a cutoff frequency of approximately 300 Hz. With all of these basic hardware filter realizations, the effective frequency range of the filtered output signal is between 40 – 300 Hz.

The acquired signal is absolutely correlating with some noise signals so when filtering procedure be applied to the input signal then the output of this circuit will be the desire signal and it will be ready for the next stage..(Wu & Der-Khachadourian, 2007)

4.2.3 Advanced filtering circuit:

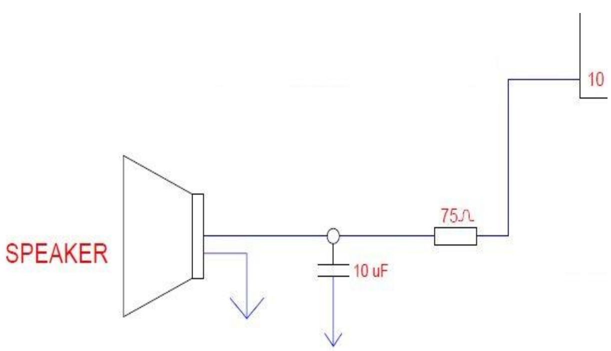

Fig.26 Scheme of Advance Filtering Circuit

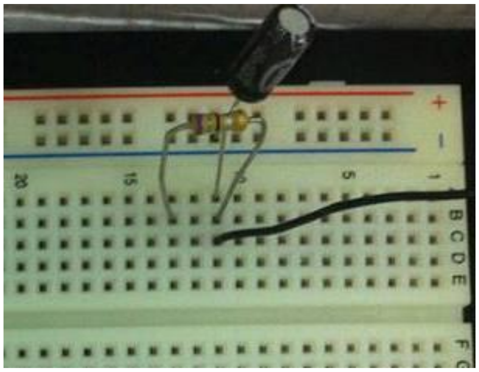

Fig.27 Applied Circuit

Here in this circuit we try as we can toeliminate of the noise signals. The circuit was designed this way in order to reduce higher frequency noise introduced to the signal at the PWM output. A relatively small resistor value was chosen for the circuit in order to interface with low input impedance headphones.So we will hear 90% pure sound from the speaker..(http://www.signalprocessingsociety.org/, 2014)

4.2.4 Speaker:

The output signal from the previous circuit comes to the speaker as input signal and it stills electrical signal, so the speaker here works as a transducer to convert the signal again from electrical form to acoustic one..(Hulse., 2009)

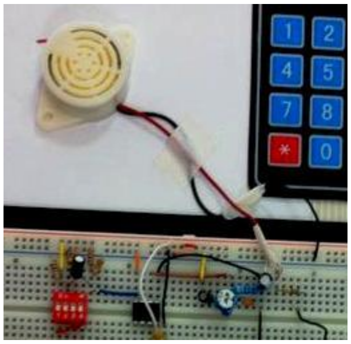

Fig.28 Speaker Circuit

The second part of our project is HEART RATE MONITOR:

4.3 Heart Rate Monitor:

4.3.1 LCD (Liquid Crystal Display):

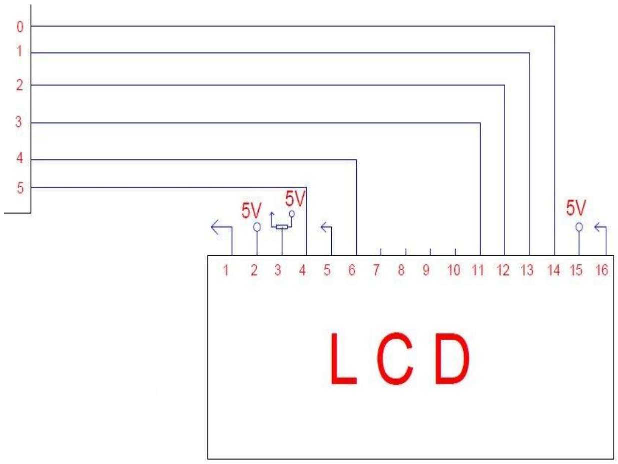

Fig.30 Scheme of LCD Connection

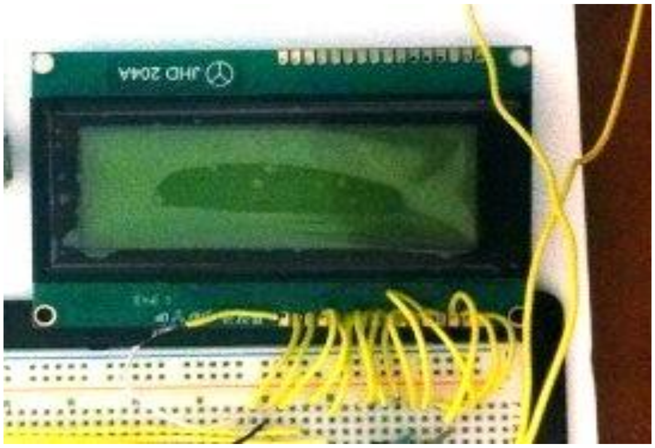

Fig.29 Applied LCD Connection

LCD is an electronic PCB circuit using for interface between the user and the electronic circuit.

Our LCD is 4x20, that means it shows 4 lines and 20 characters in the line.

It receives commands from the controller (Arduino) and implement the corresponding functions in the programming code consistently.

In our project it displays guidance messages to user like: “Press 1 for 20 sec.”, “Press 4 for 40 sec.”, to tell the user that the measuring will be during the period he selected it.

After calculation, LCD displays patient’s Heart-Rate measured by BPM (Beats Per Minute).

LCD connection to Arduino as shown in the figure:

- Pins 1,5 and 16 to GND.
- Pins 2 and 15 to 5V.
- Pins 14,13,12,11,6 and 4 to Arduino pins from 0 to 5.
- Pin 3 connects to variable resistor for brightness control.(Abdullah, 2012)

4.3.2 The Keypad:

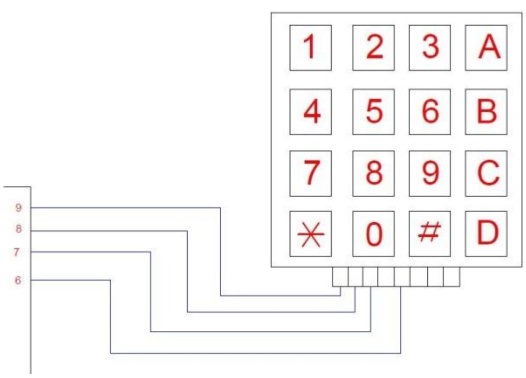

Fig.32 Scheme of Keypad Connection

Fig.31 Keypad

Board numbers can be programmed by the controller(Arduino) to carry out the required tasks that will be displayed on the LCD..

Keypad can be represented as matrix of number, each bottom is the crossing of row and column.

Our keypad is 4x4, so it has 4 rows and 4 column.

For example, pressing on number 6 is the cross between row 2 and column 3.

In our project we used keypad to provide duration choice ability by pressing on choice number that displayed on LCD, and carry it to Arduino to implement the mentioned function. (full programming code is shown in CH.7 – Appendix).

We used 3 bottoms only, 1,4 and 7 to calculate Heart Rate during 20 sec. ,40 sec. and 1 min. . For that we didn’t need to connect all 8 lines of keypad to the Arduino, we just connect 4 lines of keypad to pins 6,7,8 and 9 of Arduino.(Abdullah, 2012)

5.CHAPTER 5 - THE RESULTS

5.1 Results of first part :

The results of this part (Electronic Stethoscope) is acoustic signal, it is the sounds of heart after amplifying and filtration.

5.2 Results of second part:

Our results for this part are the interface between Arduino and user via LCD, and the control of Arduino by user.

Fig.33 First Interface Message

This is the first interfacing message that appears on LCD to the user, include topic of our project.

The second interfacing message is guidance message to help user for choice the type of implementation:

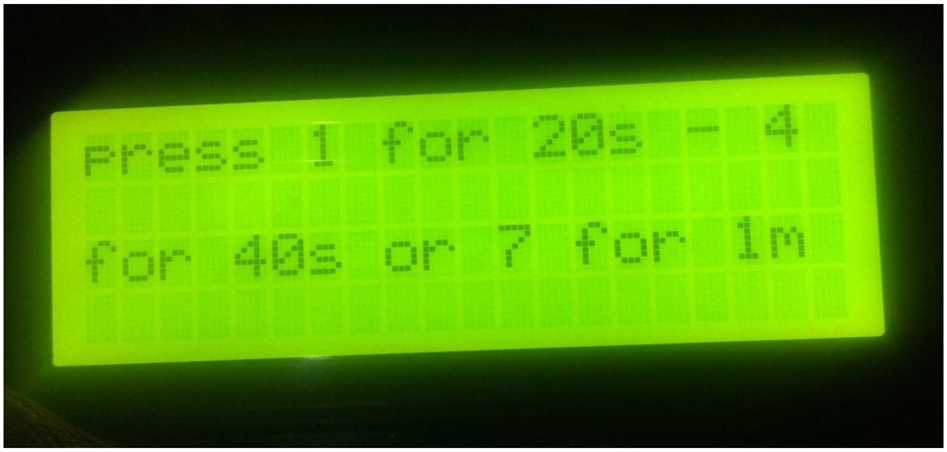

Fig.34 Second Interface Message

The result of pressing bottom ‘1’, is calculation of Heart-Rate during 20 seconds.

Fig.35 First Option

The result of pressing bottom ‘4’, is calculation of Heart-Rate during 40 seconds.

Fig.36 Second Option

The result of pressing bottom ‘7’, is calculation of Heart-Rate during 1 minute.

Fig.37 Third Option

The first confrontation we faced was the stability of the components with each other. For this we turned to welding to make sure there is no movement in the elements during work, which could lead to some problems in implementation. So we welded the LCD to be correlated with Arduino and test board.

Second challenge was to install the headset microphone inside the tube to ensure the purity of the audio excerpt. We have to heat the rubber tube to expand the diameter and install the microphone inside it and close it tightly by Super Glue.

Another confrontation we faced was informing the user at the beginning of implementation. To inform the user we used LED to be activated during recording.

6.CHAPTER 6 - CONCLUSION & FUTURE OUTLOOK

6.1 Future Outlook:

As a new setup in our project, we can add atransmitter(sender) to the project circuit works to send the signal to an external headset wirelessly supported the Wi-Fi technology..makingthedoctor working more comfortable.

Also we can provide our circuit by FLASH MEMORY to save recording signals in purpose to retrieval its and display it later,,And therefore it can be obtain a reference to the recorded signals.

Finally,we can visually display the signal on the personal

computer (Laptop) using many software environments (Matlab, Delphi ...etc)

Fig.38 Digital Stethoscope with Memory and Wi-Fi

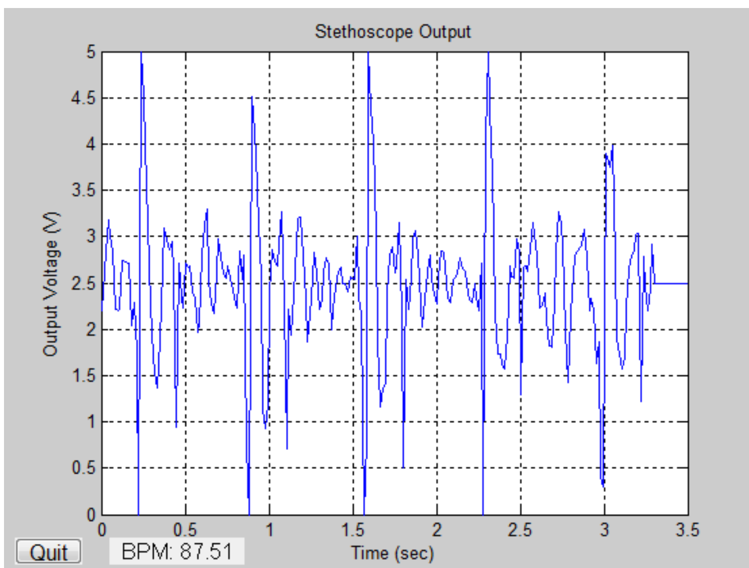

Fig.39 Stethoscope Output Schemed by Software

6.2 Conclusion:

Electronic Stethoscope and Heart Rate Monitor project is able to achieve the intended aims; it is capable to:

- Capture heart sounds signals using microphone and convert them into electrical signals.
- Produce acoustic signals in real-time depending on captured signals.
- Provide facilitated interface with user to make the using more comfortable.
- Calculate and display heart rate during specific duration identified by the user.

Protective precautions have taken to ensure user safety such as wires isolation and make sure for quality of soldered connections ...

The project we have undertaken aims to design and simulate an electronic stethoscope which will not only provide us with a better signal but can also be interfaced with users, and it can be further analyzed and stored for future uses. We have made this design comprising of very simple and well known components like microphone, operational amplifier, low pass filter , high pass filter and analog to digital converter. The project is simulated on multisim software. Our project is really cost effective as it doesn't involves any costly components and this design is undoubtedly better than other acoustic and electronic stethoscopes as it provides with better noise cancellation and provides a good form factor for the signal.

7.CHAPTER 7 - APPENICES

7.1 Programming Code:

```
// Electronic Stethoscope and Heart Rate Monitor code :

#include <LiquidCrystal.h>
#include <Keypad.h>
LiquidCrystallcd (7,8,9,10,11,12);
const byte ROWS = 3;
const byte COLS = 1;
char keys [ROWS][COLS] =
{
  {'1'},
  {'4'},
  {'7'},
};
byterowPins [ROWS] = { 6,5,4 };
bytecolPins [COLS] = { 2 };
Keypad kpd = Keypad(makeKeymap(keys), rowPins, colPins, ROWS, COLS );
int b=0,c=0,m=0;
#define signalpin  A0
#define audiopin  3
#define ledpin 13

void setup()
{
lcd.begin(20, 4);
pinMode(ledpin,OUTPUT);
pinMode(signalpin,INPUT);
pinMode (audiopin,OUTPUT);
Serial.begin(9600);
digitalWrite (ledpin, LOW);
lcd.setCursor (1, 0);
lcd.print("Elec. Stethoscope  & Heart Rate Monitor");
lcd.display();
delay(10000);
lcd.noDisplay();
delay(500);
lcd.setCursor (0, 0);
lcd.print("press 1 for 20s - 4 for 40s or 7 for 1m ");
lcd.display();
delay (10000);
lcd.noDisplay();
delay (500);
lcd.setCursor(0, 0);
lcd.print("                                            ");
lcd.display ();
delay (500);
lcd.setCursor (0, 1);
lcd.print("PRESS_");
lcd.display ();
}

void loop(){
```

```
analogRead(signalpin);
analogWrite(audiopin, analogRead(signalpin));

char key = kpd.getKey();
if(key)  // Check for a valid key.
  {
switch (key)
    {
case '1':
digitalWrite(ledpin, HIGH);
lcd.setCursor (0, 1);
lcd.print("for 20 s:           Heart Rate=      BPM");
lcd.display ();
if (analogRead(signalpin)>=100){
b++;}
delay (20000);
digitalWrite(ledpin, LOW);
      b=b*3;
lcd.setCursor (12, 4);
lcd.print (b);
break;
case '4':
digitalWrite(ledpin, HIGH);
lcd.setCursor (0, 1);
lcd.print("for 40 s:           Heart Rate=      BPM");
lcd.display ();
if (analogRead(signalpin)>=100){
c++;}
delay (40000);
digitalWrite(ledpin, LOW);
      c=c*3/2;
lcd.setCursor (12, 4);
lcd.print (c);
break;
case '7':
digitalWrite(ledpin, HIGH);
lcd.setCursor (0, 1);
lcd.print("for 1 m:            Heart Rate=      BPM");
lcd.display ();
if (analogRead(signalpin)>=100){
m++;}
delay (60000);
digitalWrite(ledpin, LOW);
lcd.setCursor (12, 4);
lcd.print (m);
break;
default:
Serial.println(key);
    }
  }
}
```
(Purdum, 2012)

7.2 References:

[1] Abdullah, A. A. (2012). *" Simply Arduino"*. Cairo: CCBY3.0.

[2] Bickley, L. S., & Szilagyi, P. G. (2005). *"The Cardiovascular System", A Guide to Physical Examination and History Taking*. 9h Ed.

[3] *http://circ.ahajournals.org/content/by/year*. (2014, 11). Retrieved from "Circulation".

[4] *http://electronicszone.net46.net/*. (2014, 11). Retrieved from The Electronic Zone.

[5] *http://en.wikipedia.org/wiki/Heart_sounds*. (2014, 10). Retrieved from Wikipedia.

[6] *http://hackaday.com/*. (2014, 12). Retrieved from "HACKADAY".

[7] *http://www.arduino.cc/*. (2014, 11). Retrieved from "Arduino".

[8] *http://www.dundee.ac.uk/*. (2014, 11). Retrieved from "University of Dundee".

[9] *http://www.ece.cornell.edu/*. (2014, 10). Retrieved from "Cornell Engineering".

[10] *http://www.ni.com/multisim/*. (2014, 11). Retrieved from NI Multisim.

[11] *http://www.signalprocessingsociety.org/*. (2014, 10). Retrieved from "IEEE Signal Processing Society".

[12] Hulse., D. &. (2009). *"Electronic Stethoscope with Idealized Bell and Diaphragm Modes"*. US patent 6026170.

[13] Idrees, S. (2004). *"Practical Electronics for Creators"*. Dar Shua'a.

[14] Maini, A. K. (2nd Edition: March,1998). *"Electronic Projects for Beginners"*.

[15] Purdum, P. D. (2012). *"Beginning C for Arduino"*. Apress.

[16] Wu, M., & Der-Khachadourian, G. (2007). *"Microphone Circuit"*. Cornell University, ECE Department. New york: Cornell University, ECE Department.

7.3 Components DataSheets:

Arduino™ UNO Reference Design

Reference Designs ARE PROVIDED "AS IS" AND "WITH ALL FAULTS". Arduino DISCLAIMS ALL OTHER WARRANTIES, EXPRESS OR IMPLIED, REGARDING PRODUCTS, INCLUDING BUT NOT LIMITED TO, ANY IMPLIED WARRANTIES OF MERCHANTABILITY OR FITNESS FOR A PARTICULAR PURPOSE

Arduino may make changes to specifications and product descriptions at any time, without notice. The Customer must not rely on the absence or characteristics of any features or instructions marked "reserved" or "undefined." Arduino reserves these for future definition and shall have no responsibility whatsoever for conflicts or incompatibilities arising from future changes to them. The product information on the Web Site or Materials is subject to change without notice. Do not finalize a design with this information.

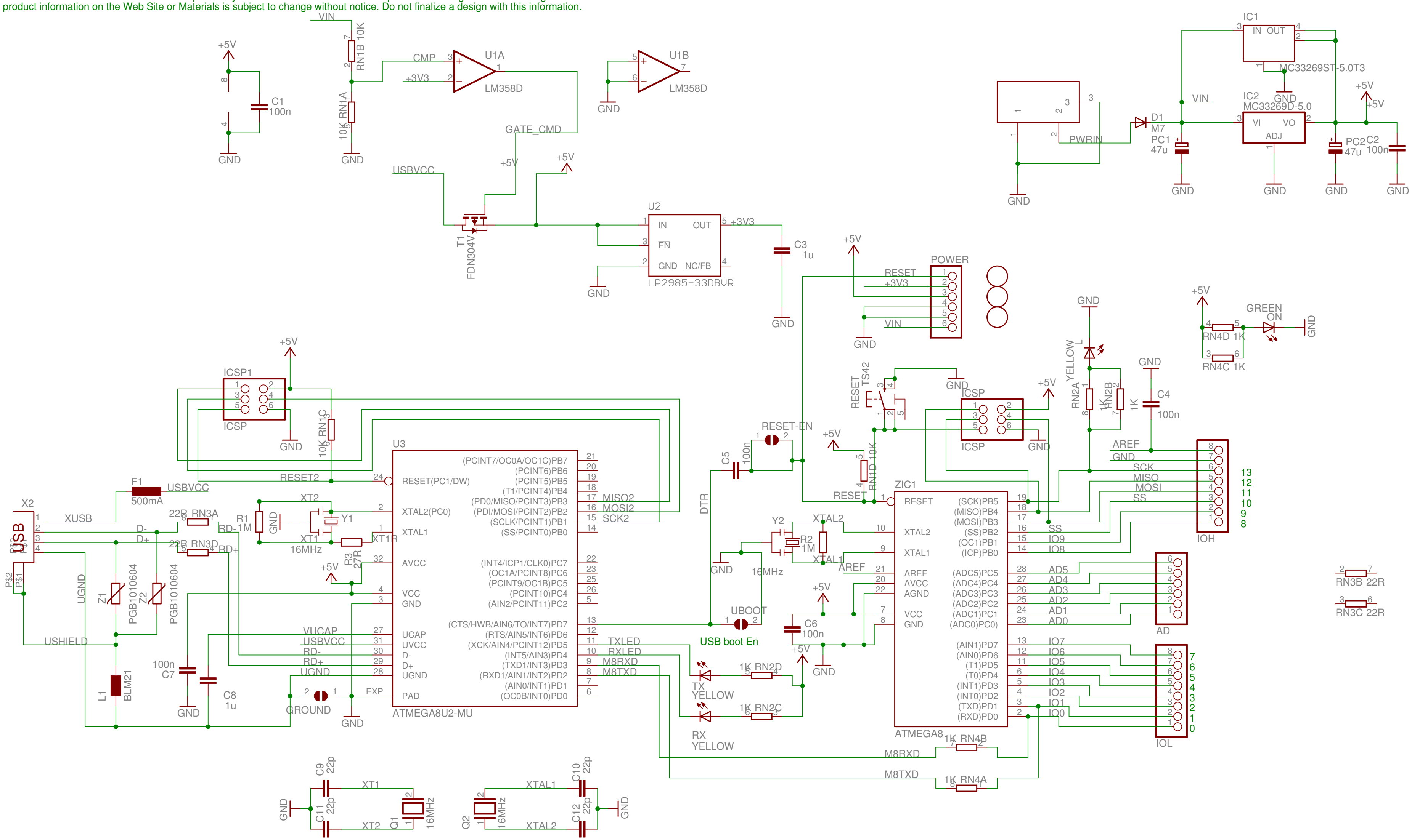

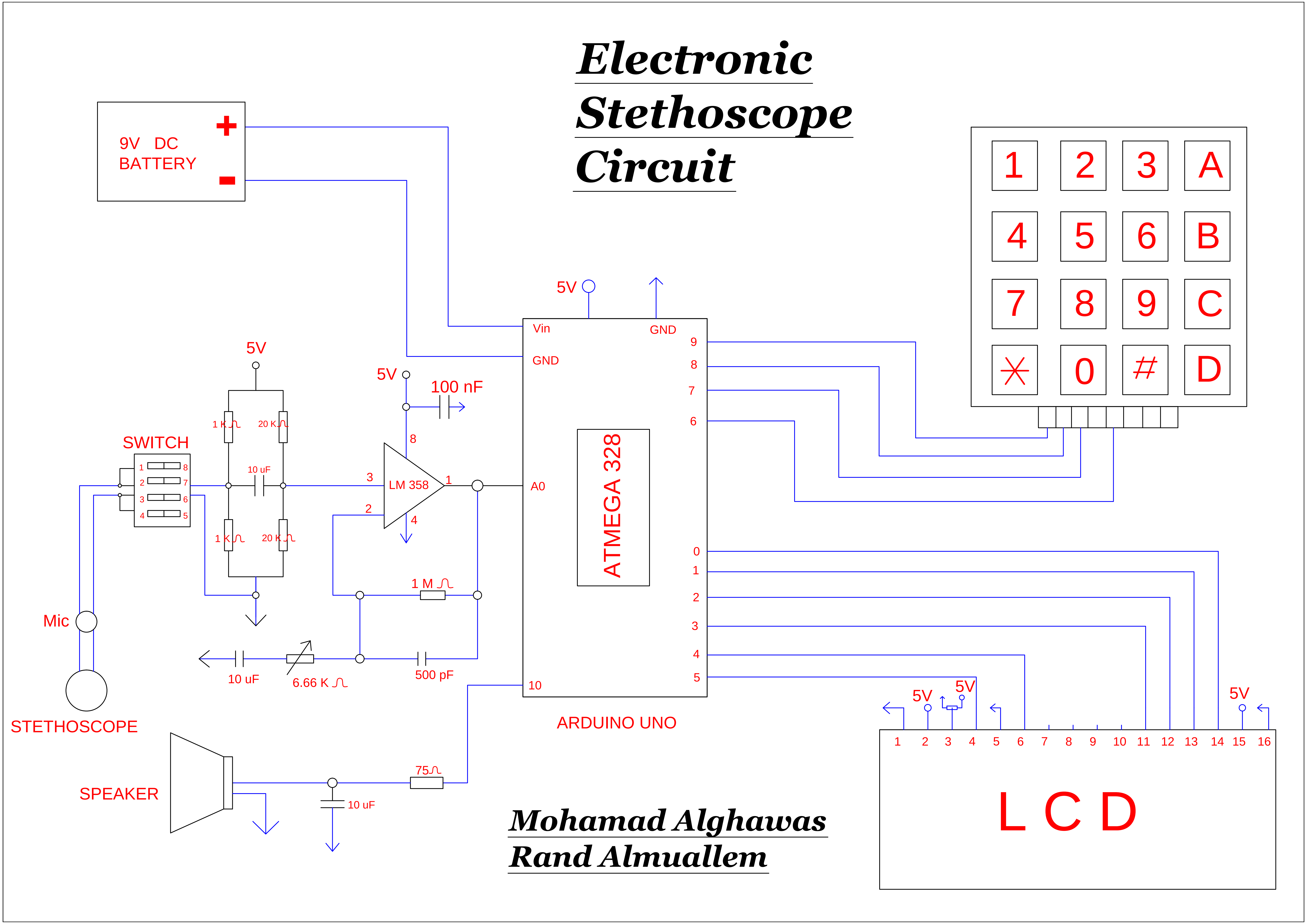
Electronic Stethoscope Circuit
9V DC BATTERY
+
-
5V
GND
Vin
GND
9
8
7
6
A0
ATMEGA 328
0
1
2
3
4
5
10
ARDUINO UNO
1 2 3 A
4 5 6 B
7 8 9 C
* 0 # D
SWITCH
1 2 3 4 5 6 7 8
1 K
20 K
10 uF
1 K
20 K
5V
100 nF
8
3
2
1
4
LM 358
1 M
10 uF
6.66 K
500 pF
Mic
STETHOSCOPE
SPEAKER
75
10 uF
1 2 3 4 5 6 7 8 9 10 11 12 13 14 15 16
L C D
Mohamad Alghawas
Rand Almuallem

4x4 Matrix Membrane Keypad (#27899)

This 16-button keypad provides a useful human interface component for microcontroller projects. Convenient adhesive backing provides a simple way to mount the keypad in a variety of applications.

Features

- Ultra-thin design
- Adhesive backing
- Excellent price/performance ratio
- Easy interface to any microcontroller
- Example programs provided for the BASIC Stamp 2 and Propeller P8X32A microcontrollers

Key Specifications

- Maximum Rating: 24 VDC, 30 mA
- Interface: 8-pin access to 4x4 matrix
- Operating temperature: 32 to 122 °F (0 to 50°C)
- Dimensions:
  Keypad, 2.7 x 3.0 in (6.9 x 7.6 cm)
  Cable: 0.78 x 3.5 in (2.0 x 8.8 cm)

Application Ideas

- Security systems
- Menu selection
- Data entry for embedded systems

How it Works

Matrix keypads use a combination of four rows and four columns to provide button states to the host device, typically a microcontroller. Underneath each key is a pushbutton, with one end connected to one row, and the other end connected to one column. These connections are shown in Figure 1.

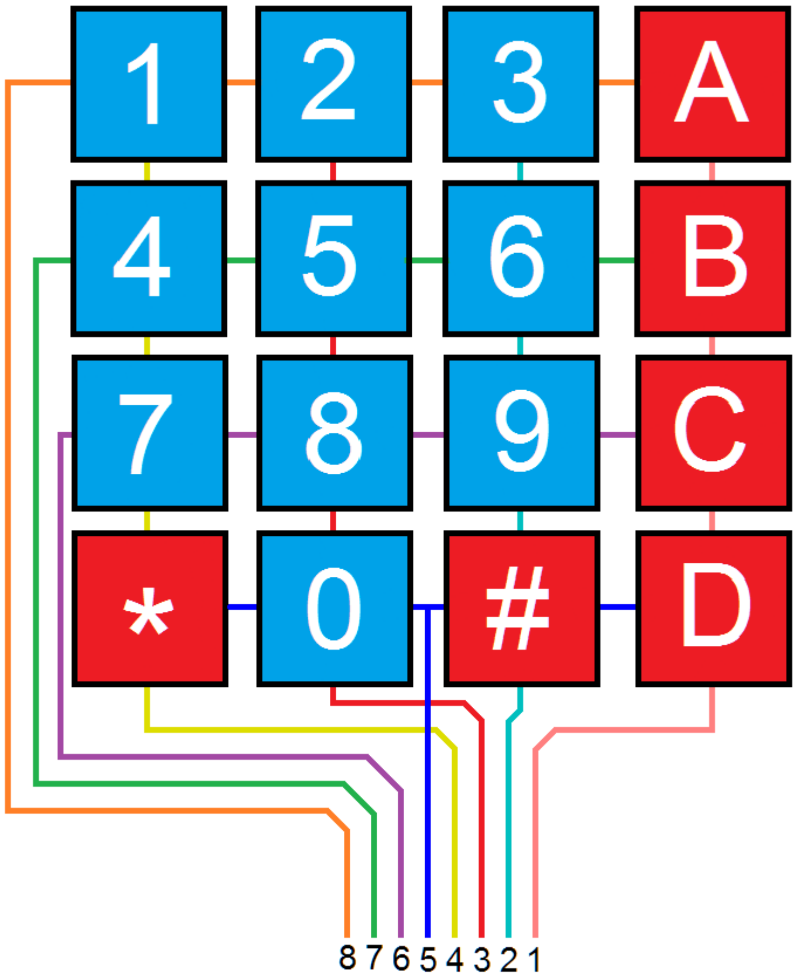

Figure 1: Matrix Keypad Connections

In order for the microcontroller to determine which button is pressed, it first needs to pull each of the four columns (pins 1-4) either low or high one at a time, and then poll the states of the four rows (pins 5-8). Depending on the states of the columns, the microcontroller can tell which button is pressed.

For example, say your program pulls all four columns low and then pulls the first row high. It then reads the input states of each column, and reads pin 1 high. This means that a contact has been made between column 4 and row 1, so button 'A' has been pressed.

Connection Diagrams

Figure 2

For use with the BASIC Stamp example program listed below.

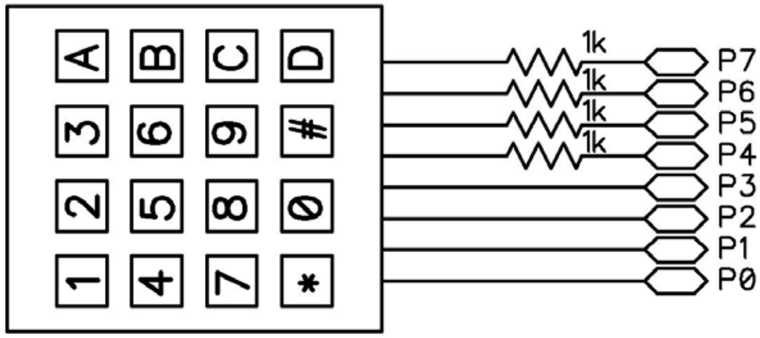

Figure 3

For use with the Propeller P8X32A example program listed below.

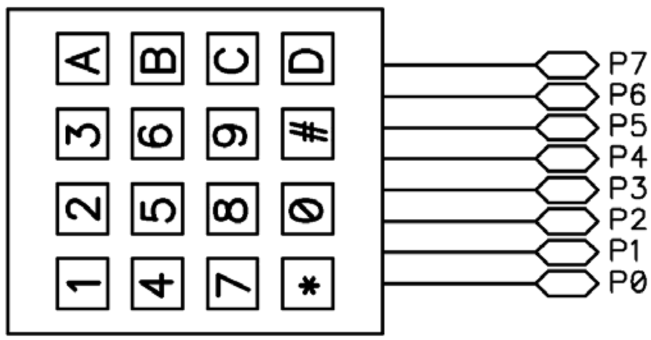

BASIC Stamp® Example Code

The example code below displays the button states of the 4x4 Matrix Membrane Keypad. It uses the Debug Terminal, which is built into the BASIC Stamp Editor software. The software is a free download from www.parallax.com/basicstampsoftware.

```
' 4x4MatrixKeypad_Demo.bs2
' Display buttons pressed on the 4x4 Matrix Membrane Keypad
' Author: Parallax HK Engineering

' {$STAMP BS2}
' {$PBASIC 2.5}

row         VAR  Nib                        ' Variable space for row counting
column      VAR  Nib                        ' Variable space for column counting
keypad      VAR  Word                       ' Variable space to store keypad output
keypadOld   VAR  Word                       ' Variable space to store old keypad output
temp        VAR  Nib                        ' Variable space for polling column states

DEBUG CLS                                   ' Clear Debug Terminal
GOSUB Update                                ' Display keypad graphic

DO
  GOSUB ReadKeypad                          ' Read keypad button states
  DEBUG HOME, BIN16 keypad, CR, CR,         ' Display 16-bit keypad value
              BIN4 keypad >> 12,CR,         ' Display 1st row 4-bit keypad value
              BIN4 keypad >> 8, CR,         ' Display 2nd row 4-bit keypad value
              BIN4 keypad >> 4, CR,         ' Display 3rd row 4-bit keypad value
              BIN4 keypad                   ' Display 4th row 4-bit keypad value
```

```
  IF keypad <> keypadOld THEN                ' If different button is pressed,
    GOSUB Update                             ' update the keypad graphic to clear
  ENDIF                                      ' old display

  IF keypad THEN                             ' Display button pressed in graphic
    GOSUB display
  ENDIF

  keypadOld = keypad                         ' Store keypad value in variable keypadOld
LOOP

' -----[ Subroutine - ReadKeypad ]-------------------------------------------------
' Read keypad button states
ReadKeypad:
  keypad = 0
  OUTL   = %00000000                         ' Initialize IO
  DIRL   = %00000000

  FOR row = 0 TO 3
    DIRB = %1111                             ' Set columns (P7-P4) as outputs
    OUTB = %0000                             ' Pull columns low (act as pull down)
    OUTA = 1 << row                          ' Set rows high one by one
    DIRA = 1 << row

    temp = 0                                 ' Reset temp variable to 0
    FOR column = 0 TO 3
      INPUT (column + 4)                     ' Set columns as inputs
      temp = temp | (INB & (1 << column))    ' Poll column state and store in temp
    NEXT

    keypad = keypad << 4 | (Temp REV 4)      ' Store keypad value
  NEXT
RETURN

' -----[ Subroutine - Update ]-----------------------------------------------------
' Graphical depiction of keypad
Update:
  DEBUG CRSRXY,0,7,
    "+---+---+---+---+",CR,
    "|   |   |   |   |",CR,
    "+---+---+---+---+",CR,
    "|   |   |   |   |",CR,
    "+---+---+---+---+",CR,
    "|   |   |   |   |",CR,
    "+---+---+---+---+",CR,
    "|   |   |   |   |",CR,
    "+---+---+---+---+"
RETURN

' -----[ Subroutine - Display ]----------------------------------------------------
' Display button pressed in keypad graphic
Display:
  IF KeyPad.BIT15 THEN  DEBUG CRSRXY, 02,08,"1"
  IF Keypad.BIT14 THEN  DEBUG CRSRXY, 06,08,"2"
  IF KeyPad.BIT13 THEN  DEBUG CRSRXY, 10,08,"3"
  IF Keypad.BIT12 THEN  DEBUG CRSRXY, 14,08,"A"
  IF KeyPad.BIT11 THEN  DEBUG CRSRXY, 02,10,"4"
  IF Keypad.BIT10 THEN  DEBUG CRSRXY, 06,10,"5"
  IF KeyPad.BIT9  THEN  DEBUG CRSRXY, 10,10,"6"
  IF Keypad.BIT8  THEN  DEBUG CRSRXY, 14,10,"B"
  IF KeyPad.BIT7  THEN  DEBUG CRSRXY, 02,12,"7"
  IF Keypad.BIT6  THEN  DEBUG CRSRXY, 06,12,"8"
  IF KeyPad.BIT5  THEN  DEBUG CRSRXY, 10,12,"9"
```

```
  IF Keypad.BIT4  THEN  DEBUG CRSRXY, 14,12,"C"
  IF KeyPad.BIT3  THEN  DEBUG CRSRXY, 02,14,"*"
  IF Keypad.BIT2  THEN  DEBUG CRSRXY, 06,14,"0"
  IF KeyPad.BIT1  THEN  DEBUG CRSRXY, 10,14,"#"
  IF Keypad.BIT0  THEN  DEBUG CRSRXY, 14,14,"D"
RETURN
```

Propeller™ P8X32A Example Code

The example code below displays the button states of the 4x4 Matrix Membrane Keypad, and is a modified version of the 4x4 Keypad Reader DEMO object by Beau Schwabe.

Note: This application uses the 4x4 Keypad Reader.spin object. It also uses the Parallax Serial Terminal to display the device output. Both objects and the Parallax Serial Terminal itself are included with the with the Propeller Tool v1.2.7 or higher, which is available from the Downloads link at www.parallax.com/Propeller.

```
{{ 4x4 Keypad Reader PST.spin
Returns the entire 4x4 keypad matrix into a single WORD variable indicating which buttons are
pressed. }}

CON

  _clkmode = xtal1 + pll16x
  _xinfreq = 5_000_000

OBJ
  text : "Parallax Serial Terminal"
  KP   : "4x4 Keypad Reader"

VAR
  word  keypad

PUB start
  'start term
  text.start(115200)
  text.str(string(13,"4x4 Keypad Demo..."))
  text.position(1, 7)
  text.str(string(13,"RAW keypad value 'word'"))

  text.position(1, 13)
  text.str(string(13,"Note: Try pressing multiple keys"))

  repeat
    keypad := KP.ReadKeyPad     '<-- One line command to read the 4x4 keypad
    text.position(5, 2)
    text.bin(keypad>>0, 4)      'Display 1st ROW
    text.position(5,3)
    text.bin(keypad>>4, 4)      'Display 2nd ROW
    text.position(5, 4)
    text.bin(keypad>>8, 4)      'Display 3rd ROW
    text.position(5, 5)
    text.bin(keypad>>12, 4)     'Display 4th ROW
    text.position(5, 9)
    text.bin(keypad, 16)        'Display RAW keypad value
```

Revision History

v1.0: original document
v1.1: Updated Figure 1 on page 2
v1.2: Updated Figure 1 on page 2 (again); updated BS2 comments

XIAMEN OCULAR

GDM2004D

SPECIFICATIONS OF LCD MODULE

Features

1. 5x8 dots
2. Built-in controller (S6A0069 or equivalent)
3. +5V power supply
4. 1/16 duty cycle
5. LED Backlight

Outline dimension

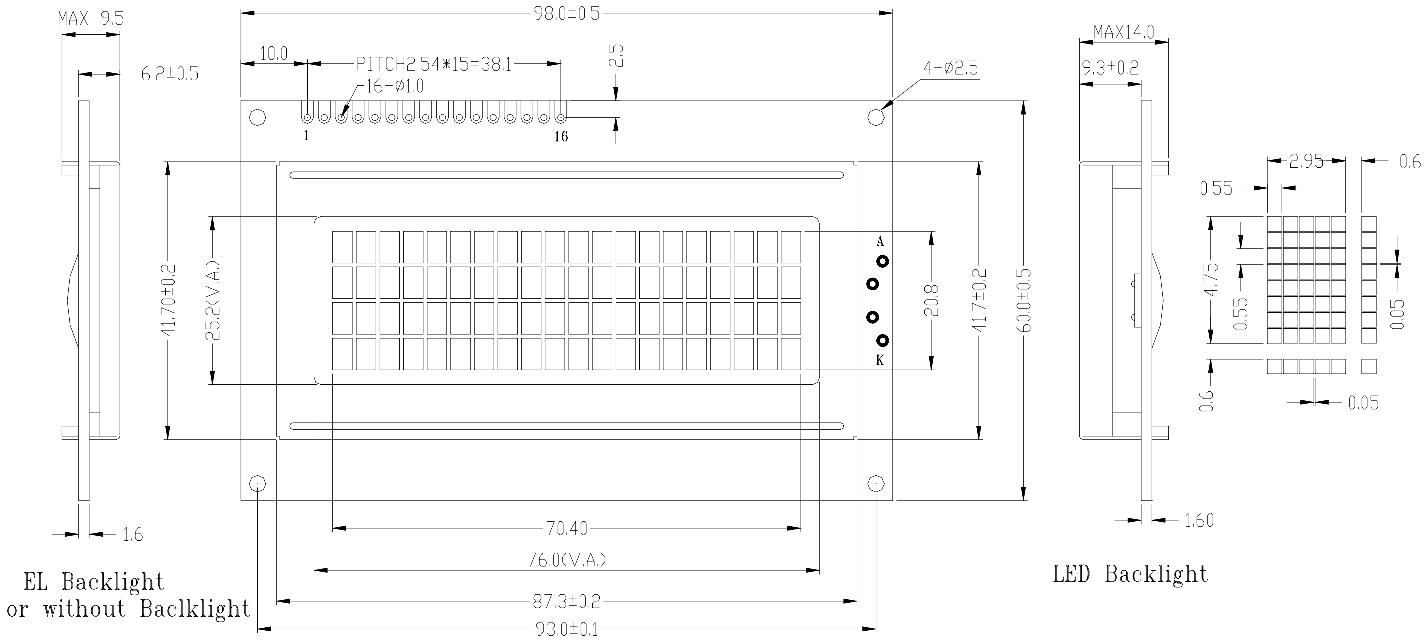

Unit: mm

Absolute maximum ratings

Item	Symbol	Standard			Unit
Power voltage	V_{DD}-V_{SS}	0	-	7.0	V
Input voltage	VIN	VSS	-	VDD	
Operating temperature range	Top	0	-	+50	℃
Storage temperature range	Tst	-10	-	+60	
Environmental Humidity	RH≤70%				
Expected Life Time	≥50000				H

Wide temperature range is available
(operating/storage temperature as –20~+70/-30~+80℃)

Block diagram

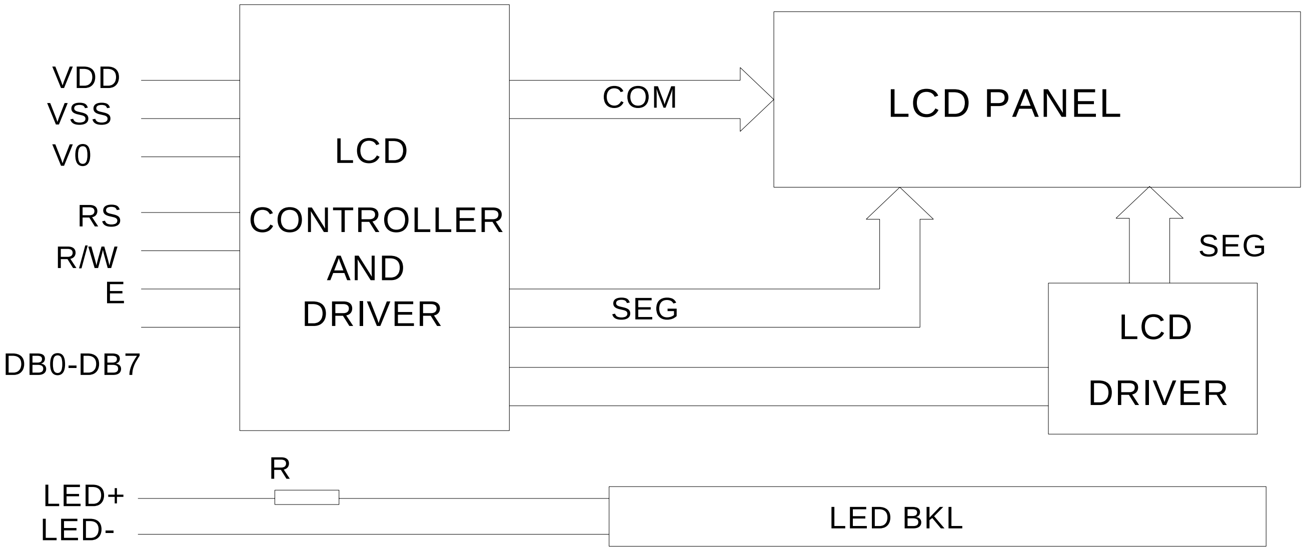

Interface pin description

Pin no.	Symbol	External connection	Function
1	V_{SS}	Power supply	Signal ground for LCM (GND)
2	V_{DD}		Power supply for logic (+5V) for LCM
3	V_0		Contrast adjust
4	RS	MPU	Register select signal
5	R/W	MPU	Read/write select signal
6	E	MPU	Operation (data read/write) enable signal
7~10	DB0~DB3	MPU	Four low order bi-directional three-state data bus lines. Used for data transfer between the MPU and the LCM. These four are not used during 4-bit operation.
11~14	DB4~DB7	MPU	Four high order bi-directional three-state data bus lines. Used for data transfer between the MPU
15	LED+	LED BKL power Supply	Power supply for BKL (Anode)
16	LED-		Power supply for BKL (GND)

Contrast adjust

A）For Single Source

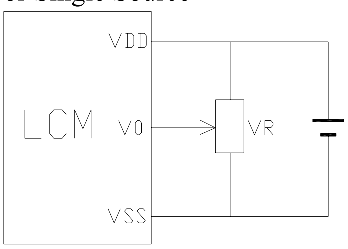

For Module with Normal Temperature Range Fluid

V_{DD}~V_0: LCD Driving voltage

VR: 10k~20k

Optical characteristics

STN type display module (Ta=25℃, VDD=5.0V)

Item	Symbol	Condition	Min.	Typ.	Max.	Unit
Viewing angle	θ	$C_r \geqslant 2$	-60	-	35	deg
	Φ		-40	-	40	
Contrast ratio	C_r		-	15	-	-
Response time (rise)	T_r	-	-	150	250	ms
Response time (fall)	T_r	-	-	150	250	

Electrical characteristics

LED ratings

Item	Symbol	Min	Typ.	Max	Unit
Forward Voltage	V_F	3.8	4.0	4.4	V
Forward current	IF		240		mA
Power	P			1.01	W
Peak wave length	λp		568		nm
Luminance	Lv		185		Cd/m^2
Operating temperature range	VOP	-20	-	+70	℃
Storage temperature range	VST	-25	-	+80	

DC characteristics

Parameter	Symbol	Conditions	Min.	Typ.	Max.	Unit
Supply voltage for LCD	V_{DD}-V_0	Ta =25℃	-	4.6	-	V
Input voltage	V_{DD}		4.7	-	5.5	
Backlight supply voltage	V_F		-	4.1	4.3	
Supply current	I_{DD}	Ta=25℃, V_{DD}=5.0V	-	1.5	3	mA
Backlight supply current	I_F	V_{DD}=5.0V R=6.8	150			
Input leakage current	I_{LKG}		-	-	1.0	uA
"H" level input voltage	V_{IH}		2.2	-	V_{DD}	V
"L" level input voltage	V_{IL}	Twice initial value or less	0	-	0.6	
"H" level output voltage	V_{OH}	LOH=-0.25mA	2.4	-	-	
"L" level output voltage	V_{OL}	LOH=1.6mA	-	-	0.4	

Read cycle (Ta=25℃, VDD=5.0V)

Parameter	Symbol	Test pin	Min.	Typ.	Max.	Unit
Enable cycle time	t_c	E	500	-	-	ns
Enable pulse width	t_w		300	-	-	
Enable rise/fall time	t_r, t_f		-	-	25	
RS; R/W setup time	t_{su}	RS; R/W	100	-	-	
RS; R/W address hold time	t_h	RS; R/W	10	-	-	
Read data output delay	t_d	DB0~DB7	60	-	90	
Read data hold time	t_{dh}		20	-	-	

Write cycle

Parameter	Symbol	Test pin	Min.	Typ.	Max.	Unit
Enable cycle time	t_c	E	500	-	-	ns
Enable pulse width	t_w		300	-	-	
Enable rise/fall time	t_r, t_f		-	-	25	
RS; R/W setup time	t_{su1}	RS; R/W	100	-	-	
RS; R/W address hold time	t_{h1}	RS; R/W	10	-	-	
Read data output delay	t_{su2}	DB0~DB7	60	-	-	
Read data hold time	t_{h2}		10	-	-	

Write mode timing diagram

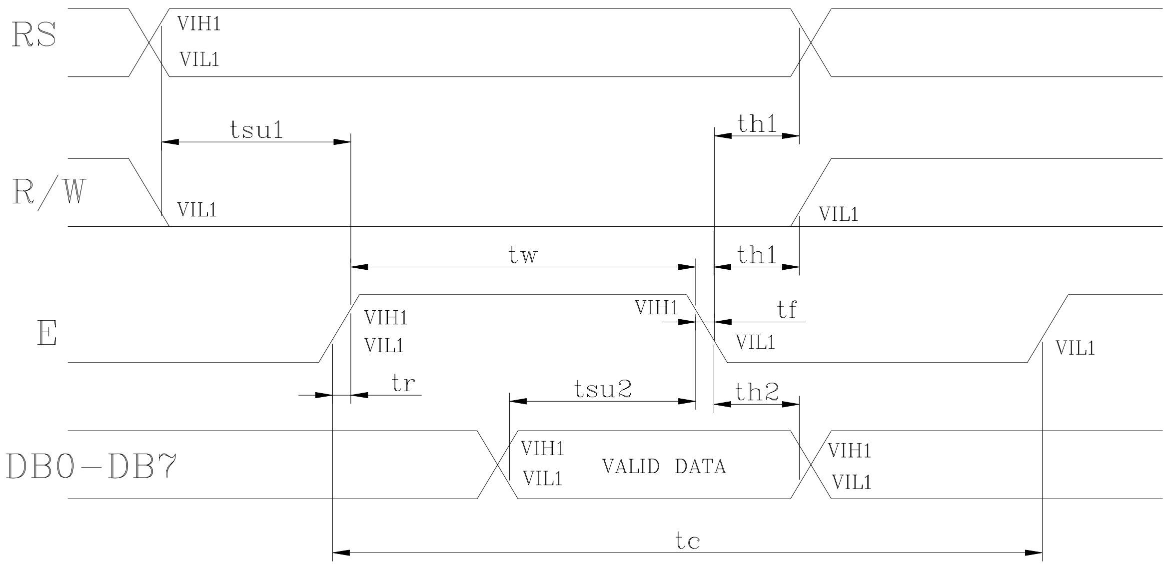

Read mode timing diagram

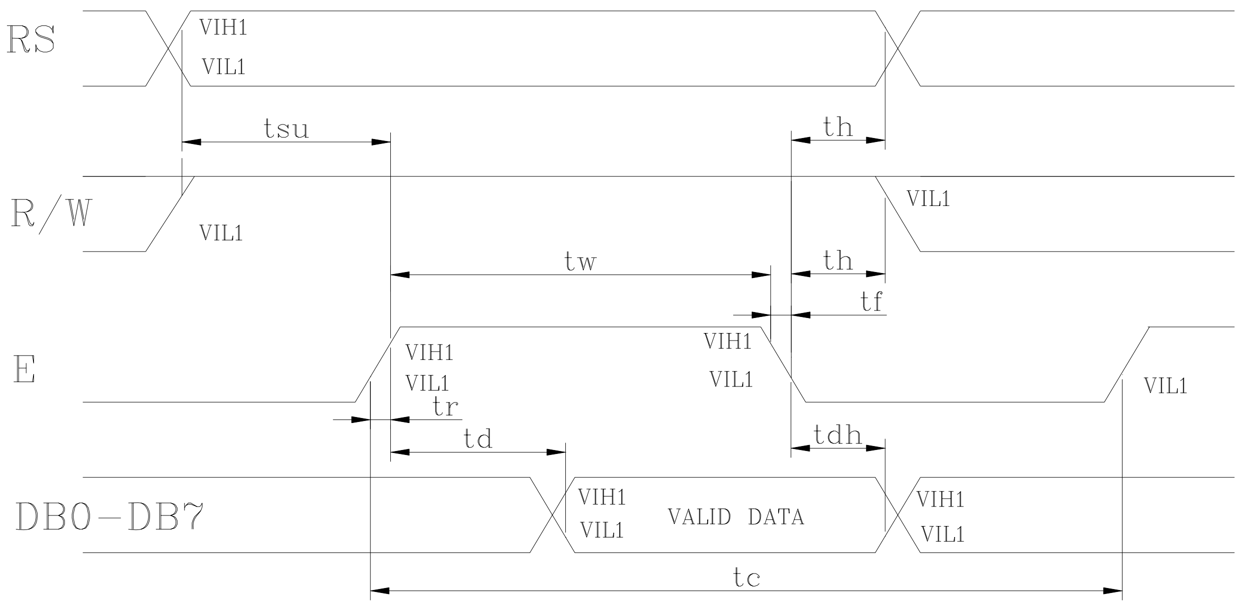

Instruction description

Outline

To overcome the speed difference between the internal clock of KS0066U and the MPU clock, KS0066U performs internal operations by storing control in formations to IR or DR. The internal operation is determined according to the signal from MPU, composed of read/write and data bus (Refer to Table7).
Instructions can be divided largely into four groups:

1) KS0066U function set instructions (set display methods, set data length, etc.)
2) Address set instructions to internal RAM
3) Data transfer instructions with internal RAM
4) Others

The address of the internal RAM is automatically increased or decreased by 1.
Note: during internal operation, busy flag (DB7) is read "High".
Busy flag check must be preceded by the next instruction.
When an MPU program with checking the busy flag (DB7) is made, it must be necessary 1/2 fuss for executing the next instruction by the falling edge of the "E" signal after the busy flag (DB7) goes to "LOW".

Contents

1) Clear display

RS	R/W	DB7	DB6	DB5	DB4	DB3	DB2	DB1	DB0
0	0	0	0	0	0	0	0	0	1

Clear all the display data by writing "20H" (space code) to all DDRAM address, and set DDRAM address to "00H" into AC (address counter).
Return cursor to the original status, namely, brings the cursor to the left edge on the fist line of the display.
Make the entry mode increment (I/D="High").

2) Return home

RS	R/W	DB7	DB6	DB5	DB4	DB3	DB2	DB1	DB0
0	0	0	0	0	0	0	0	1	-

Return home is cursor return home instruction.
Set DDRAM address to "00H" into the address counter.
Return cursor to its original site and return display to its original status, if shifted.
Contents of DDRAM does not change.

3) Entry mode set

RS	R/W	DB7	DB6	DB5	DB4	DB3	DB2	DB1	DB0
0	0	0	0	0	0	0	0	I/D	SH

Set the moving direction of cursor and display.

I/D: increment / decrement of DDRAM address (cursor or blink)
When I/D="high", cursor/blink moves to right and DDRAM address is increased by 1.
When I/D="Low", cursor/blink moves to left and DDRAM address is increased by 1.
*CGRAM operates the same way as DDRAM, when reading from or writing to CGRAM.
(I/D="high". shift left, I/D="Low". Shift right).

4) Display ON/OFF control

RS	R/W	DB7	DB6	DB5	DB4	DB3	DB2	DB1	DB0
0	0	0	0	0	0	1	D	C	B

Control display/cursor/blink ON/OFF 1 bit register.

D: Display ON/OFF control bit
When D="High", entire display is turned on.
When D="Low", display is turned off, but display data remains in DDRAM.
C: cursor ON/OFF control bit
When D="High", cursor is turned on.
When D="Low", cursor is disappeared in current display, but I/D register preserves its data.
B: Cursor blink ON/OFF control bit
When B="High", cursor blink is on, which performs alternately between all the "High" data and display characters at the cursor position.
When B="Low", blink is off.

5) Cursor or display shift

RS	R/W	DB7	DB6	DB5	DB4	DB3	DB2	DB1	DB0
0	0	0	0	0	1	S/C	R/L	-	-

Shifting of right/left cursor position or display without writing or reading of display data.
This instruction is used to correct or search display data. (Refer to Table 6)
During 2-line mode display, cursor moves to the 2nd line after the 40th digit of the 1st line.
When display data is shifted repeatedly, each line is shifted individually.
When display shift is performed, the contents of the address counter are not changed.

Shift patterns according to S/C and R/L bits

S/C	R/L	Operation
0	0	Shift cursor to the left, AC is decreased by 1
0	1	Shift cursor to the right, AC is increased by 1
1	0	Shift all the display to the left, cursor moves according to the display
1	1	Shift all the display to the right, cursor moves according to the display

6) Function set

RS	R/W	DB7	DB6	DB5	DB4	DB3	DB2	DB1	DB0
0	0	0	0	1	DL	N	F	-	-

DL: Interface data length control bit
When DL="High", it mans 8-bit bus mode with MPU.
When DL="Low", it mans 4-bit bus mode with MPU. Hence, DL is a signal to select 8-bit or 4-bit bus mode.
When 4-but bus mode, it needs to transfer 4-bit data twice.

N: Display line number control bit
When N="Low", 1-line display mode is set.
When N="High", 2-line display mode is set.

F: Display line number control bit
When F="Low", 5x8 dots format display mode is set.
When F="High", 5x11 dots format display mode.

7) Set CGRAM address

RS	R/W	DB7	DB6	DB5	DB4	DB3	DB2	DB1	DB0
0	0	0	1	AC5	AC4	AC3	AC2	AC1	AC0

Set CGRAM address to AC.
The instruction makes CGRAM data available from MPU.

8) Set DDRAM address

RS	R/W	DB7	DB6	DB5	DB4	DB3	DB2	DB1	DB0
0	0	1	AC6	AC5	AC4	AC3	AC2	AC1	AC0

Set DDRAM address to AC.
This instruction makes DDRAM data available form MPU.
When 1-line display mode (N=LOW), DDRAM address is form "00H" to "4FH".
In 2-line display mode (N=High), DDRAM address in the 1st line form "00H" to "27H", and DDRAM address In the 2nd line is from "40H" to "67H".

9) Read busy flag & address

RS	R/W	DB7	DB6	DB5	DB4	DB3	DB2	DB1	DB0
0	1	BF	AC6	AC5	AC4	AC3	AC2	AC1	AC0

This instruction shows whether KS0066U is in internal operation or not.
If the resultant BF is "High", internal operation is in progress and should wait BF is to be LOW, which by then if the nest instruction can be performed. In this instruction you can also read the value of the address counter.

10) Write data to RAM

RS	R/W	DB7	DB6	DB5	DB4	DB3	DB2	DB1	DB0
1	0	D7	D6	D5	D4	D3	D2	D1	D0

Write binary 8-bit data to DDRAM/CGRAM.
The selection of RAM from DDRAM, and CGRAM, is set by the previous address set instruction (DDRAM address set, CGRAM address set).
RAM set instruction can also determine the AC direction to RAM.
After write operation. The address is automatically increased/decreased by 1, according to the entry mode.

11) Read data from RAM

RS	R/W	DB7	DB6	DB5	DB4	DB3	DB2	DB1	DB0
1	1	D7	D6	D5	D4	D3	D2	D1	D0

Read binary 8-bit data from DDRAM/CGRAM.
The selection of RAM is set by the previous address set instruction. If the address set instruction of RAM is not performed before this instruction, the data that has been read first is invalid, as the direction of AC is not yet determined. If RAM data is read several times without RAM address instructions set before, read operation, the correct RAM data can be obtained from the second. But the first data would be incorrect, as there is no time margin to transfer RAM data.
In case of DDRAM read operation, cursor shift instruction plays the same role as DDRAM address set instruction, It also transfers RAM data to output data register.
After read operation, address counter is automatically increased/decreased by 1 according to the entry mode.
After CGRAM read operation, display shift may not be executed correctly.

NOTE: In case of RAM write operation, AC is increased/decreased by 1 as in read operation.
At this time, AC indicates next address position, but only the previous data can be read by the read instruction.

Instruction table

Instruction	Instruction code										Description	Execution Time (fosc= 270 KHZ
	RS	R/W	DB7	DB6	DB5	DB4	DB3	DB2	DB1	DB0		
Clear Display	0	0	0	0	0	0	0	0	0	1	Write "20H" to DDRA and set DDRAM address to "00H" from AC	1.53ms
Return Home	0	0	0	0	0	0	0	0	1	-	Set DDRAM address to "00H" From AC and return cursor to Its original position if shifted. The contents of DDRAM are not changed.	1.53ms
Entry mode Set	0	0	0	0	0	0	0	1	I/D	SH	Assign cursor moving direction And blinking of entire display	39us
Display ON/ OFF control	0	0	0	0	0	0	1	D	C	B	Set display (D), cursor (C), and Blinking of cursor (B) on/off Control bit.	
Cursor or Display shift	0	0	0	0	0	1	S/C	R/L	-	-	Set cursor moving and display Shift control bit, and the Direction, without changing of DDRAM data.	39us
Function set	0	0	0	0	1	DL	N	F	-	-	Set interface data length (DL: 8-Bit/4-bit), numbers of display Line (N: =2-line/1-line) and, Display font type (F: 5x11/5x8)	39us
Set CGRAM Address	0	0	0	1	AC5	AC4	AC3	AC2	AC1	AC0	Set CGRAM address in address Counter.	39us
Set DDRAM Address	0	0	1	AC6	AC5	AC4	AC3	AC2	AC1	AC0	Set DDRAM address in address Counter.	39us
Read busy Flag and Address	0	1	BF	AC6	AC5	AC4	AC3	AC2	AC1	AC0	Whether during internal Operation or not can be known By reading BF. The contents of Address counter can also be read.	0us
Write data to Address	1	0	D7	D6	D5	D4	D3	D2	D1	D0	Write data into internal RAM (DDRAM/CGRAM).	43us
Read data From RAM	1	1	D7	D6	D5	D4	D3	D2	D1	D0	Read data from internal RAM (DDRAM/CGRAM).	43us

NOTE: When an MPU program with checking the busy flag (DB7) is made, it must be necessary 1/2fosc is necessary for executing the next instruction by the falling edge of the "E" signal after the busy flag (DB7) goes to "Low".

DDRAM address:

Display position

1	2	3	4	5	6	7	8	9	10	11	12	13	14	15	16	17	18	19	20
00	01	02	03	04	05	06	07	08	09	0A	0B	0C	0D	0E	0F	10	11	12	13
40	41	42	43	44	45	46	47	48	49	4A	4B	4C	4D	4E	4F	50	51	52	53
14	15	16	17	18	19	1A	1B	1C	1D	1E	1F	20	21	22	23	24	25	26	27
54	55	56	57	58	59	5A	5B	5C	5D	5E	5F	60	61	62	63	64	65	66	67

DDRAM address

Standard character pattern

Upper 4bit / Lower 4bit	LLLL	LLLH	LLHL	LLHH	LHLL	LHLH	LHHL	LHHH	HLLL	HLLH	HLHL	HLHH	HHLL	HHLH	HHHL	HHHH
LLLL	CG RAM (1)			0	@	P	`	p				ー	タ	ミ	α	p
LLLH	(2)		!	1	A	Q	a	q			。	ア	チ	ム	ä	q
LLHL	(3)		"	2	B	R	b	r			「	イ	ツ	メ	β	θ
LLHH	(4)		#	3	C	S	c	s			」	ウ	テ	モ	ε	∞
LHLL	(5)		$	4	D	T	d	t			、	エ	ト	ヤ	μ	Ω
LHLH	(6)		%	5	E	U	e	u			・	オ	ナ	ユ	σ	ü
LHHL	(7)		&	6	F	V	f	v			ヲ	カ	ニ	ヨ	ρ	Σ
LHHH	(8)		'	7	G	W	g	w			ァ	キ	ヌ	ラ	g	π
HLLL	(1)		(	8	H	X	h	x			ィ	ク	ネ	リ	√	x̄
HLLH	(2)		)	9	I	Y	i	y			ゥ	ケ	ノ	ル	⁻¹	y
HLHL	(3)		*	:	J	Z	j	z			ェ	コ	ハ	レ	j	千
HLHH	(4)		+	;	K	[	k	{			ォ	サ	ヒ	ロ	ˣ	万
HHLL	(5)		,	<	L	¥	l	|			ャ	シ	フ	ワ	¢	円
HHLH	(6)		-	=	M	]	m	}			ュ	ス	ヘ	ン	£	÷
HHHL	(7)		.	>	N	^	n	→			ョ	セ	ホ	゛	ñ	
HHHH	(8)		/	?	O	_	o	←			ッ	ソ	マ	゜	ö	█

Low Power Dual Operational Amplifier

DESCRIPTION

The LM358 contains two independent high gain operational amplifiers with internal frequency compensation. The two op-amps operate over a wide voltage range from a single power supply. Also use a split power supply. The device has low power supply current drain, regardless of the power supply voltage. The low power drain also makes the LM358 a good choice for battery operation.

When your project calls for a traditional op-amp function, now you can streamline your design with a simple single power supply. Use ordinary +5VDC common to practice any digital system or personal computer application, without requiring an extra 15V power supply just to have the interface electronics you need.

The LM358 is a versatile, rugged workhorse with a thousand-and-one uses, from amplifying signals from a variety of transducers to DC gain blocks, or any op-amp function. The attached pages offer some recipes that will have your project cooking in no time.

PIN CONFIGURATION

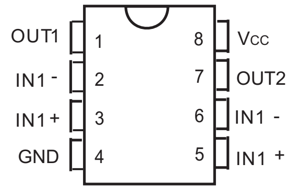

(Top View)

LOGIC SYMBOL

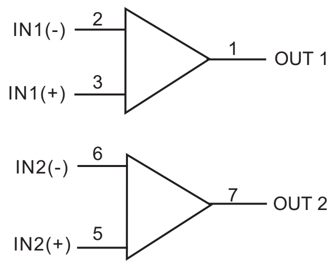

FEATURES

- Internally frequency compensated for unity gain
- Large DC voltage gain: 100dB
- Wide bandwidth (unity gain): 1 MHz (temperature-compensated)
- Wide power supply range:
  Single supply:3VDC to 32 VDC
  Dual supplies:+1.5VDC to +16VDC
- Input common-mode voltage range includes ground
- Large output voltage swing: 0V DC to V_{CC}-1.5V DC
- Power drain suitable for battery operation
- Low input offset voltage and offset current
- Differential input voltage range equal to the power supply voltage

APPLICATION

- Transducer Amplifiers
- DC Gain-blocks
- All The Conventional Op Amp Circuits

ORDERING INFORMATION

Temperature Range	Package		Orderable Device	Package Qty
-40°C to +85°C	SOP-8L	Pb-Free	LM358D	100Units/Tube
			LM358DR	3000Units/R&T
	DIP-8L		LM358P	50Units/Tube

SCHEMATIC DIAGRAM

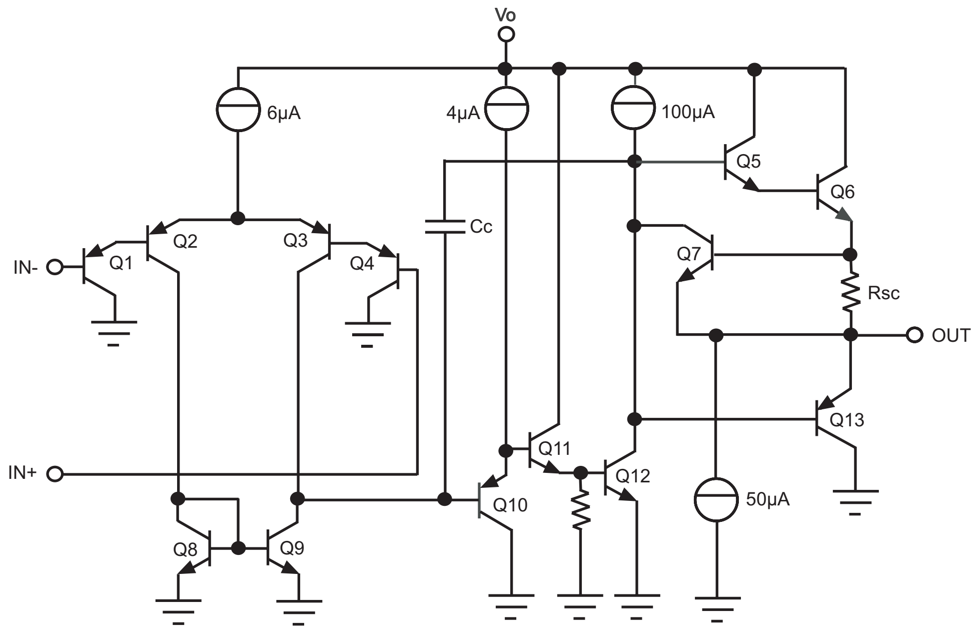

Figure 1. Schematic

ABSOLUTE MAXIMUM RATINGS(NOTE1)

Parameter		Symbol	Value	Unit
Power Supply Voltages	Single Supply	V_{CC}	32	V
	Split Supplies		± 16	
Input Differential Voltage Range(Note 2)		V_{IDR}	±32	V
Input Common Mode Voltage Range		V_{ICR}	-0.3 to 32	V
Output Short Circuit Duration		I_{SC}	Continuous	
Junction Temperature		T_J	150	°C
Storage Temperature		T_{Stg}	-55 to +125	°C
Input Current,per pin(Note 3)		I_{IN}	50	mA
Lead Temperature,1mm from Case for 10 Seconds		T_L	260	°C

Note 1:Maximum Ratings are those values beyond which damage to the device may occur. Functional operation should be restricted to the Recommended Operating Conditons.
Power Derating:
DIP Package:-10mW/°C from 65 to 125°C
SOP Package:-7mW/°C from 65 to 125°C

Note 2:Split Power Supplies.

Note 3:V_{IN}<-0.3V.This input current will only exist when voltage at any of the input leads is driven negative.

RECOMMENDED OPERATING CONDITIONS

Parameter		Symbol	Min	Max	Unit
DC Supply Voltage	Single Supply	V_{CC}	5.0	30	V
	Split Supplies		±2.5	±15	
Operating Temperature, All Package Types		T_A	-40	+85	°C

Note: This device contains protection circuitry to guard against damage due to high static voltages or electric fields.However,precautions must be taken to avoid applications of any voltage higher than maximum rated voltages to this high-impedance circuit.For proper operation, V_{IN} and V_{OUT} should be constrained to the range GND≤(V_{IN} or V_{OUT})≤V_{CC}.

Unused inputs must always be tied to an appropriate logic voltage level (e.g.,either GND or V_{CC}).

Unused outputs must be left open.

ELECTRICAL CHARACTERISTICS(T_A=-40 to +85°C)

Parameter	Symbol	Test Conditions	Min	Typ	Max	Unit
Maximum Input Offset Voltage	V_{I0}	V_O=1.4V,V_{CC}=5.0-30V R_S=0,V_{ICM}=0VtoV_{CC}-1.7V			9.0 5.0 *	mV
Input Offset Voltage Drift	$\Delta V_{IO}/\Delta T$	R_S=0Ω,V_{CC}=30V		7.0		μV/°C
Maximum Input Offset Current	I_{IO}	V_{CC}=5.0V			150 50*	nA
Input Offset Current Drift	$\Delta I_{IO}/\Delta T$	R_S=0Ω,V_{CC}=30V		10		pA/°C
Maximum Input Bias Current	I_{IB}	V_{CC}=5.0V			500 250*	nA
Input Common Mode Voltage Range	V_{ICR}	V_{CC}=30V	0		28	V
Maximum Power Supply Current	I_{CC}	R_L= ∞,V_{CC}=30V,V_O=0V			3	mA
		R_L= ∞,V_{CC}=5V,V_O=0V			1.2	
Minimum Large Signal Open-Loop Voltage Gain	A_{VOL}	V_{CC}=15V R_L≥2kΩ	15 25*			V/mV
Minimum Output Low-Level Voltage Swing	V_{OH}	V_{CC}=30V,R_L=2kΩ	26			V
		V_{CC}=30V,R_L=10kΩ	27			
Maximum Output Low-Level Voltage Swing	V_{OL}	V_{CC}=5V,R_L=10kΩ			20	mV
Common Mode Rejection	CMR	V_{CC}=30V,R_L=10kΩ	65*			dB

ELECTRICAL CHARACTERISTICS(CONTINUED)

Parameter	Symbol	Test Conditions	Min	Typ	Max	Unit
Power Supply Rejection	PSR	V_{CC}=30V	65*			dB
Channel Separation	CS	f=1kHz to 20kHz, V_{CC}=30V	-120*			dB
Maximum Output Short Circuit to GND	I_{SC}	V_{CC}=5.0V			60*	mA
Minimun Output Source Current	I_{SOURCE}	V_{IN+}=1V,V_{IN-}=0V, V_{CC}=15V,V_O=0V	-10			mA
Minimum Output Sink Current	I_{SINK}	V_{IN+}=0V,V_{IN-}=1V, V_{CC}=15V,V_O=15V	5 10*			mA
		V_{IN+}=0V,V_{IN-}=1, V_{CC}=15V,V_O=0.2V	12*			μA
Differential Input Voltage Range	V_{IOR}	ALL V_{IN}>GND or V-Supply(ifused)			V_{CC}^*	V

*at T_A=25°C

TYPICAL PERFORMANCE CHARACTERISTICS

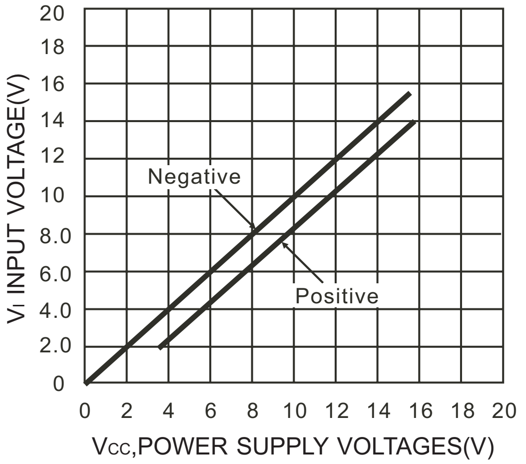

Figure 2. Input Voltage Range

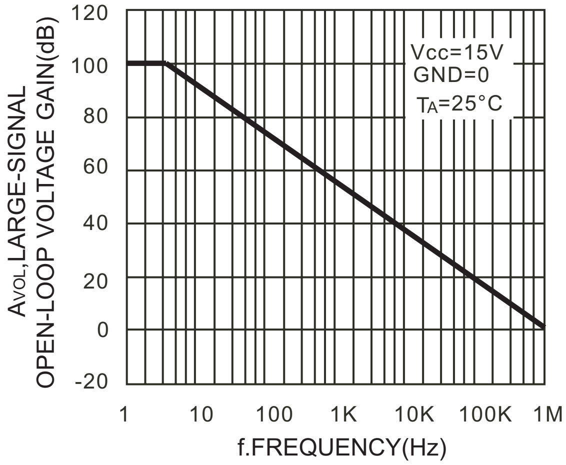

Figure 3. Open-Loop Frequency

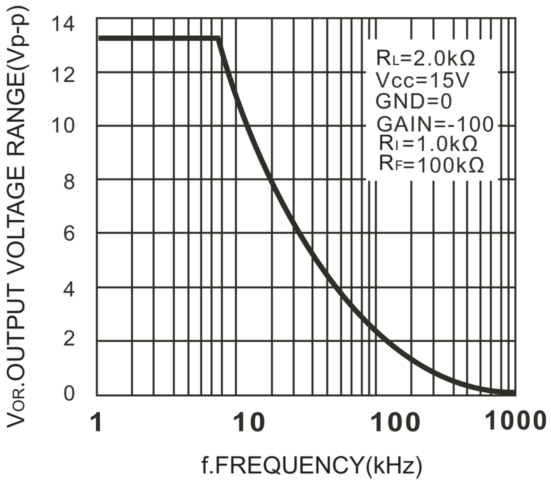

Figure 4. Large-signal Frequency Response

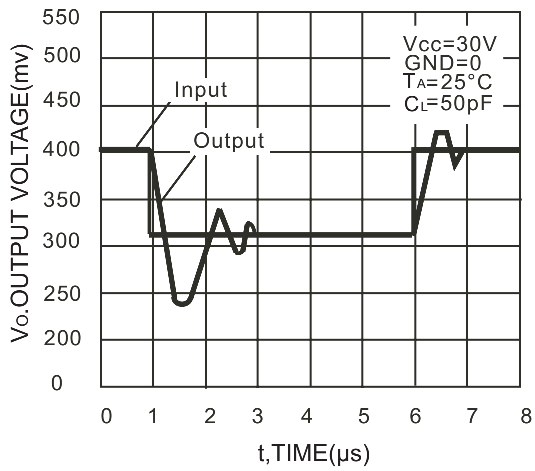

Figure 5. Small-Signsl Voltage Follower Pulse Response(Non-inverting)

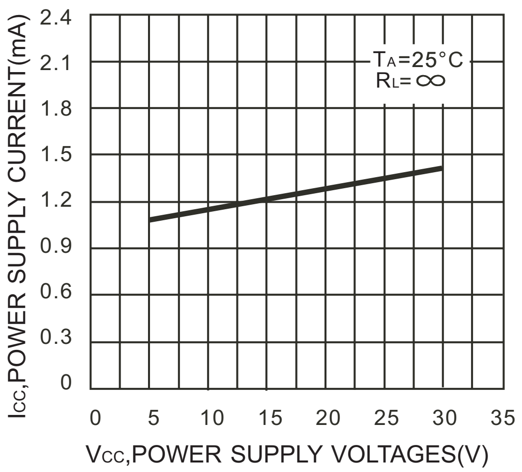

Figure 6. Power Supply Current VS. Power Supply Voltage

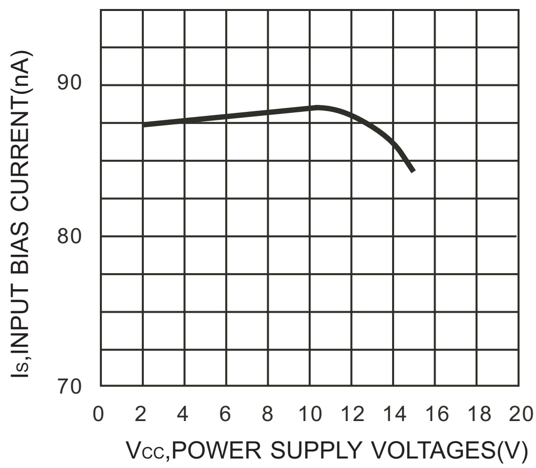

Figure 7. Input Bias Current VS. Power Supply Voltage

TYPICAL APPLICATION

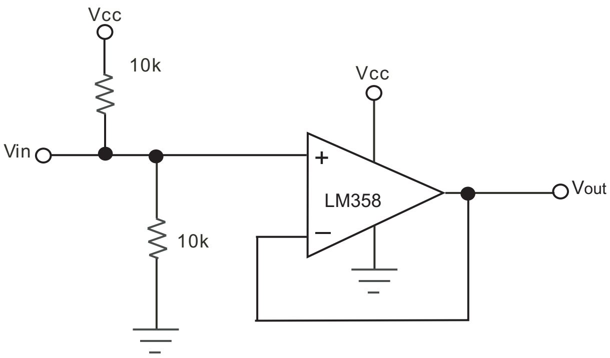

Figure 8. Input Biasing Voltage-Follower

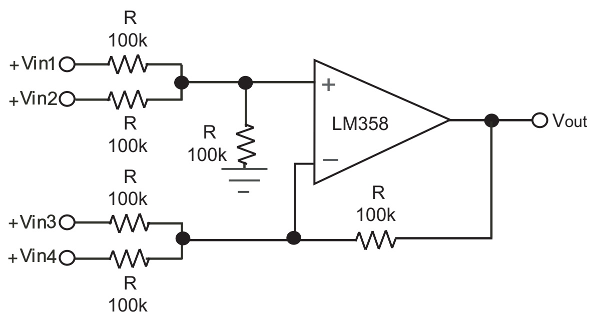

Figure 9. DC Summing Amplifier

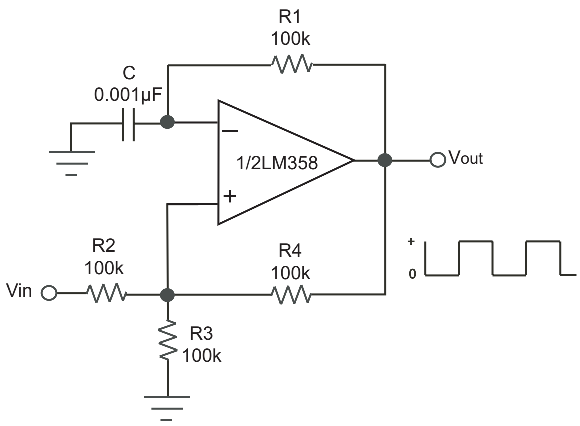

Figure 10. Square wave Oscillator

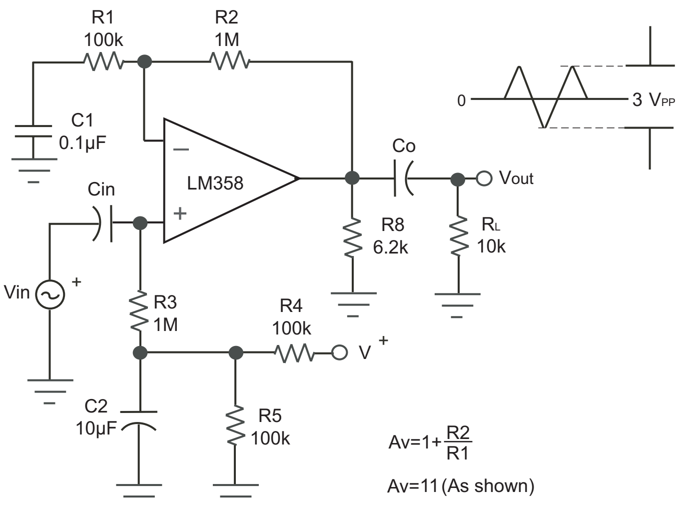

Figure 11. AC Coupled Non-Inverting Amplifier

PHYSICAL DIMENSIONS
SOP8L

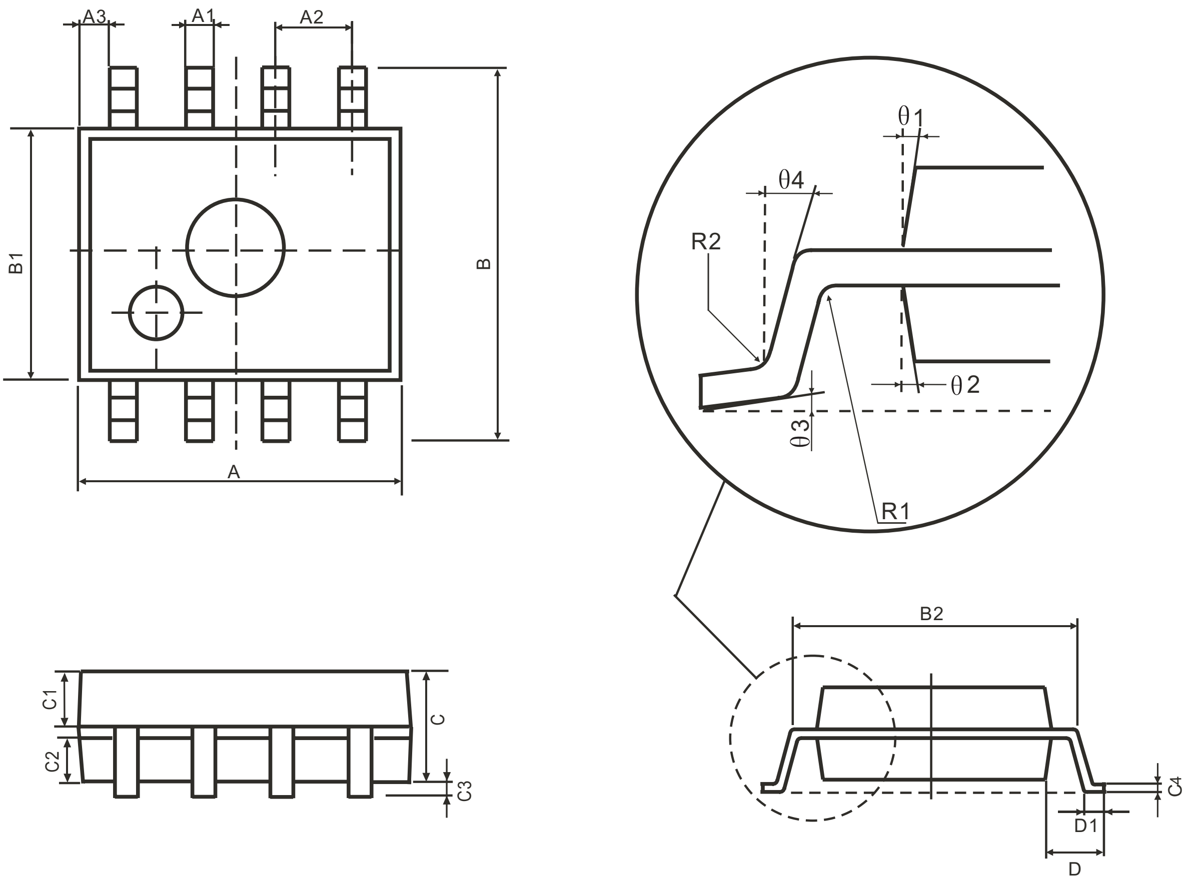

Symbol	Dimension(mm)		Symbol	Dimension(mm)	
	Min	Max		Min	Max
A	4.95	5.15	C3	0.05	0.20
A1	0.37	0.47	C4	0.20(TYP)	
A2	1.27(TYP)		D	1.05(TYP)	
A3	0.41(TYP)		D1	0.40	0.60
B	5.80	6.20	R1	0.07(TYP)	
B1	3.80	4.00	R2	0.07(TYP)	
B2	5.0(TYP)		θ1	17°(TYP)	
C	1.30	1.50	θ2	13°(TYP)	
C1	0.55	0.65	θ3	4°(TYP)	
C2	0.55	0.65	θ4	12°(TYP)	

DIP8L

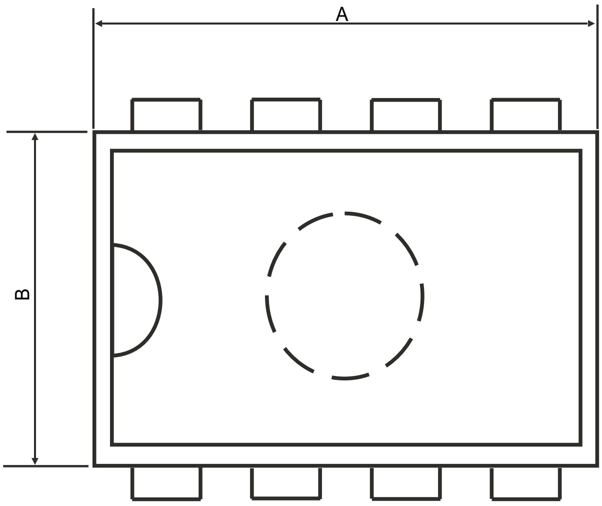

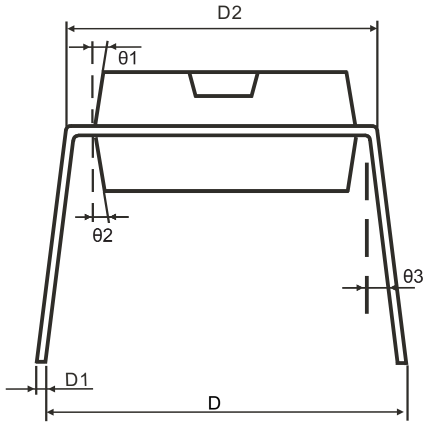

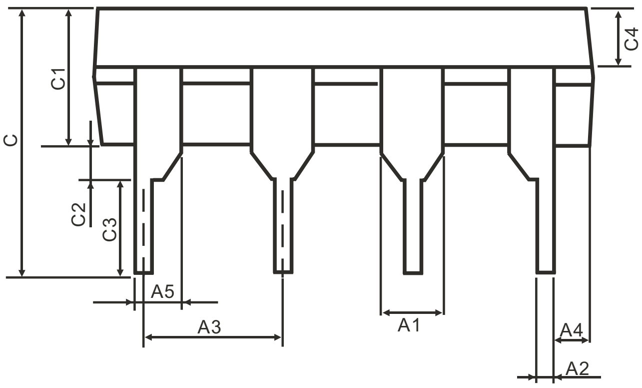

Symbol	Dimension(mm)		Symbol	Dimension(mm)	
	Min	Max		Min	Max
A	9.30	9.50	C2	0.5(TYP)	
A1	1.524(TYP)		C3	3.3(TYP)	
A2	0.39	0.53	C4	1.57(TYP)	
A3	2.54(TYP)		D	8.20	8.80
A4	0.66(TYP)		D1	0.20	0.35
A5	0.99(TYP)		D2	7.62	7.87
B	6.3	6.5	θ1	8°(TYP)	
C	7.20(TYP)		θ2	8°(TYP)	
C1	3.30	3.50	θ3	5°(TYP)	

PART NUMBER: CMA-4544PF-W **DESCRIPTION:** electret condenser microphone

SPECIFICATIONS

directivity	omnidirectional	
sensitivity (S)	-44 ±2 dB	f = 1KHz, 1Pa 0dB = 1V/Pa
sensitivity reduction (ΔS-Vs)	-3 dB	f = 1KHz, 1Pa Vs = 3.0 ~ 2.0 V dc
operating voltage	3 V dc (standard), 10 V dc (max.)	
output impedance (Zout)	2.2 KΩ	f = 1KHz, 1Pa
operating frequency (f)	20 ~ 20,000 Hz	
current consumption (IDSS)	0.5 mA max.	Vs = 3.0 V dc RL = 2.2KΩ
signal to noise ratio (S/N)	60 dBA	f = 1KHz, 1Pa A-weighted
operating temperature	-20 ~ +70° C	
storage temperature	-20 ~ +70° C	
dimensions	ø9.7 x 4.5 mm	
weight	0.80 g max.	
material	Al	
terminal	pin type (hand soldering only)	
RoHS	yes	

note: We use the “Pascal (Pa)” indication of sensitivity as per the recomendation of I.E.C. (International Electrotechnical Commission). The sensitivity of “Pa” will increase 20dB compared to the “ubar” indication. Example: -60dB (0dB = 1V/ubar) = -40dB (1V/Pa)

APPEARANCE DRAWING

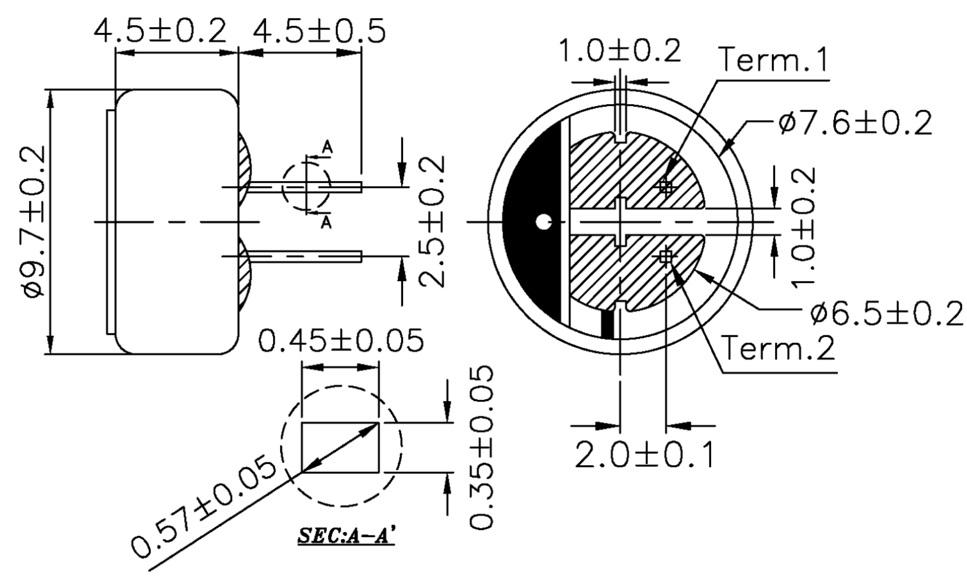

PART NUMBER: CMA-4544PF-W **DESCRIPTION:** electret condenser microphone

MEASUREMENT CIRCUIT

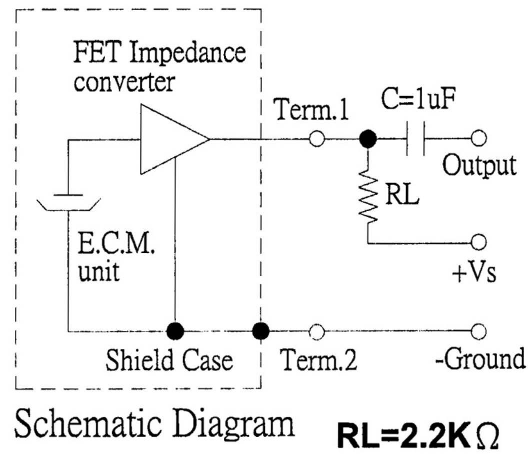

FREQUENCY RESPONSE CURVE

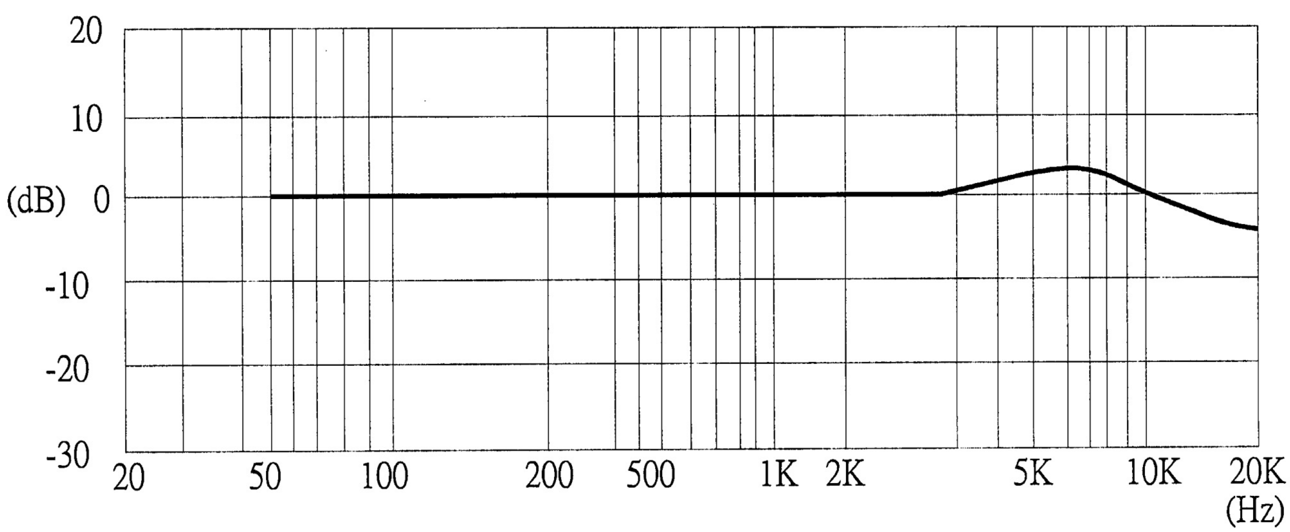

PART NUMBER: CMA-4544PF-W **DESCRIPTION:** electret condenser microphone

MECHANICAL CHARACTERISTICS

item	test condition	evaluation standard
soldering heat resistance	Lead terminals are immersed in solder bath of 270 ±5°C for 2 ±0.5 seconds.	No interference in operation.
PCB wire pull strength	The pull force will be applied to double lead wire: Horizontal 4.9N (0.5kg) for 30 seconds	No damage or cutting off.
vibration	The part will be measured after applying a vibration amplitude of 1.5 mm with 10 to 55 Hz band of vibration frequency to each of the 3 perpendicular directions for 2 hours.	After any tests, the sensitivity should be within ±3dB compared to the initial measurement.
drop test	The part will be dropped from a height of 1 m onto a 20 mm thick wooden board 3 times in 3 axes (X, Y, Z) for a total of 9 drops.	

ENVIRONMENT TEST

<table>
<tr><th>item</th><th>test condition</th><th>evaluation standard</th></tr>
<tr><td>high temp. test</td><td>After being placed in a chamber at +70°C for 72 hours.</td><td rowspan="4">The part will be measured after being placed at +25°C for 6 hours. After any tests, the sensitivity should be within ±3dB compared to the initial measurement.</td></tr>
<tr><td>low temp. test</td><td>After being placed in a chamber at -20°C for 72 hours.</td></tr>
<tr><td>humidity test</td><td>After being placed in a chamber at +40°C and 90±5% relative humidity for 240 hours.</td></tr>
<tr><td>temp. cycle test</td><td>The part shall be subjected to 10 cycles. One cycle will consist of:
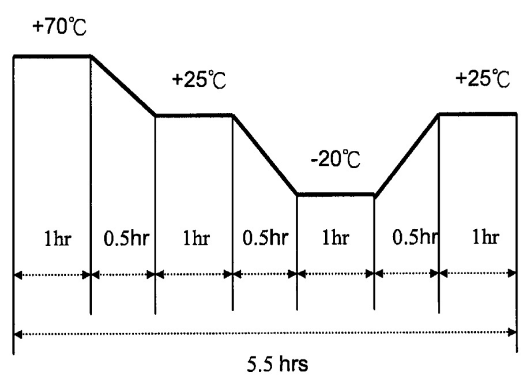
</td></tr>
</table>

TEST CONDITIONS

standard test condition	a) temperature: +5 ~ +35°C	b) humidity: 45 - 85%	c) pressure: 860-1060 mbar
judgement test condition	a) temperature: +25 ±2°C	b) humidity: 60 - 70%	c) pressure: 860-1060 mbar

PART NUMBER: CMA-4544PF-W **DESCRIPTION:** electret condenser microphone

PACKAGING

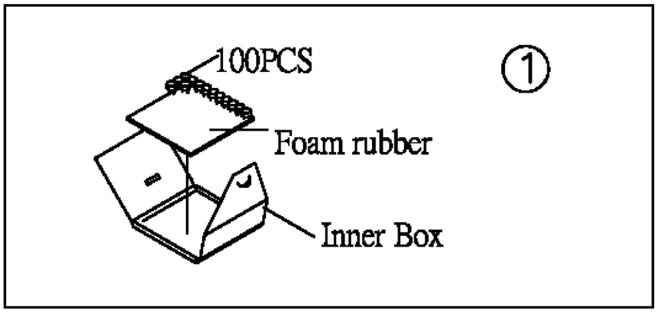

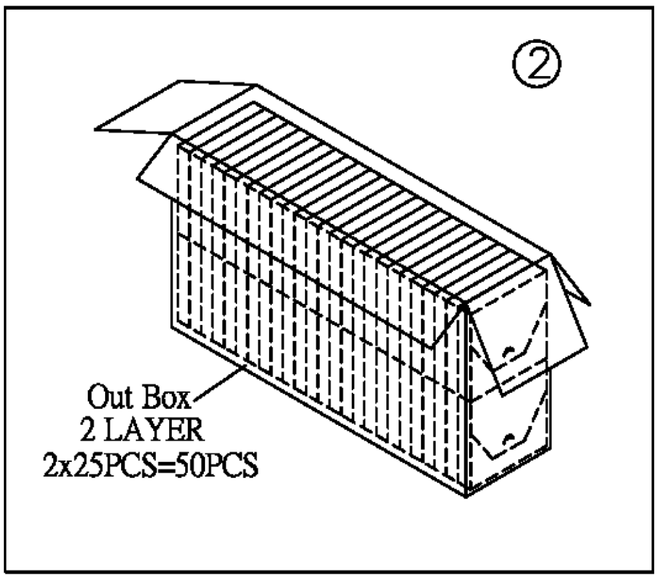

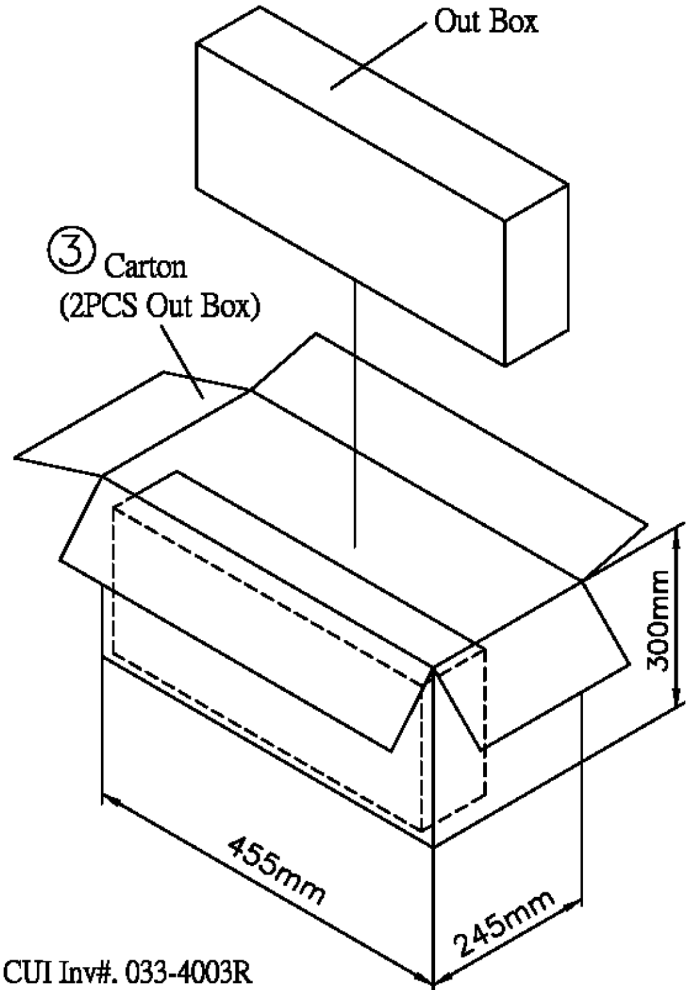

1. CUI Inv#. 033-4003R
   CUI Part#. CMA-4544PF-W
2. RoHS Compliant

Inner Box	100mmx100mmx15mm	100PCSx1=100PCS
Out Box	435mmx120mmx280mm	100PCSx50=5,000PCS
Carton Box	455mmx245mmx300mm	5,000PCSx2=10,000PCS